6702 HERCULES
SURGICAL TABLE

OWNER'S MANUAL
(Includes Operation, Maintenance and Parts)

Read this manual before operating the table! This information is necessary for the safe and efficient operation of the equipment.

TEC-D-0083 REV6
09/27/2017

Distributed by:

US - SKYTRON
5085 Corporate Exchange Blvd. S.E.
Grand Rapids, MI 49512 (616) 656-2900
www.skytron.us

SKYTRON EUROPE BV
Floresstraat 52
8022 AD Zwolle
THE NETHERLANDS

Mizuho Corporation
3-30-13 Hongo, Bunkyo-ku
Tokyo 113-0033
JAPAN

EC REP
Emergo Europe B.V.
Prinsessegracht 20, 2514 AP
The Hague, The Netherlands

The base language for this document is ENGLISH. Any translations must be from the base language document.

Printed copies are not controlled documents.

Although current at the time of publication, SKYTRON'S policy of continuous development makes this manual subject to change without notice. If current manuals are required, contact your local SKYTRON representative or contact SKYTRON directly at the distribution addresses listed above.

TABLE OF CONTENTS

TITLE	PAGE
SECTION 1. SAFETY INFORMATION	3
1-1. Special User Attention	3
1-2. Safety Precautions	5
SECTION 2. EQUIPMENT SPECIFICATIONS	8
2-1. Intended Use	8
2-2. Installation	8
2-3. Environmental Conditions	8
2-4. Certification	8
2-5. Classification	8
2-6. Electrical Specifications	8
2-7. Mechanical Specifications	8
2-8. Movement Over Threshold	9
2-9. Dimensions	9
2-10. Equipment Labels	10
2-11. Label Symbols	11
SECTION 3. OPERATION	12
3-1. General	12
3-2. Power Requirements	12
3-3. Pendant Control	12
3-4. Floor Lock/Brake System	13
3-5. Electrical Power	13
3-6. AC Operation	14
3-7. Battery Operation	14
3-8. Automatic Shut-Off	15
3-9. Charging the Batteries	15
3-10. Positioning Functions	16
3-11. Emergency Stop Switch	20
3-12. Emergency Back-up Controls	20
3-13. Emergency Brake Release	21
3-14. Head Section	22
3-15. Leg & Back Section Removal/Installation	22
3-16. Table Top Rotation	23
3-17. Pad Sets	24
3-18. Positioning	24
3-19. Positioning and Clearance	28

TABLE OF CONTENTS

TITLE	PAGE
SECTION 4. MAINTENANCE	30
4-1. Cleaning and Disinfecting	30
4-2. Routine Inspections	31
4-3. Preventive Maintenance	31
4-4. Operator Troubleshooting	32
4-5. Maintenance Checks & Services	32
4-6. Service	36
4-7. Disposal Instructions	36
4-8. Storage	36
4-9. Maintenance Matrix	37
SURGICAL TABLE MAINTENANCE MATRIX	37
SECTION 5. REPLACEMENT PARTS	38
5-1. Head Section Components	38
5-2. Top Section Components	40
5-3. Base Components	42
SECTION 6. ELECTROMAGNETIC EMISSIONS	44
SECTION 7. REVISION HISTORY	48

SECTION 1. SAFETY INFORMATION

1-1. Special User Attention

Prior to use, all personnel that may operate this table must be instructed in the correct operational procedures. The 6702 HERCULES surgical table is designed for use by trained and qualified personnel for human medical purposes only.

Initial use should not begin until all personnel that will operate the surgical table have been instructed in its proper operation by a clinical in-service protocol administered by a SKYTRON representative.

A routine instructional program must be implemented by the facility for proper usage instructions for all personnel that may operate this table.

The maximum lifting capacity of the 6702 table is 1200 pounds (540 kg) and the maximum articulation weight capacity is 1000 pounds (450 kg).

When lifting or articulating large patients, pay close attention to the patient position as well as the positioning guidelines and limitations listed in the operation instructions.

This equipment is intended for use by healthcare professionals only. This equipment may cause radio interference or may disrupt the operation of nearby equipment. It may be necessary to take mitigation measures, such as reorienting or relocating the table or shielding the location. If other devices are in close proximity to the table, ensure that these devices comply with electromagnetic compatibility medical standards.

The extreme positioning capabilities of the 6702 table requires special attention for possible interference points when using multiple function positioning. As with the operation of any surgical table, a certain amount of care should be exercised to position the patient safely. Although the thick pads and sheets substantially protect the patient, pinch points, located at the joints of the top section should always be considered. BE SURE THAT THE ARMS, HANDS AND FINGERS OF THE PATIENT AND THOSE OF THE OPERATING ROOM PERSONNEL ARE CLEAR OF ALL MOVING PARTS BEFORE MOVING THE TABLE. Refer to Figure 1-1 for a Pinch/Crush Point Diagram. Proper restraints should always be used for patient safety.

Ensure that the following transportation instructions are adhered to before moving the 6702 table:

a. Remove the power cord.

b. Place the main POWER SWITCH in the OFF position.

c. Tighten all handles and knobs.

Ensure that the following packaging guidelines are adhered to when shipping the 6702 table:

- The 6702 table must be shipped in a suitable container and sealed from the outside atmosphere.
- The shipping container must employ appropriate reinforcement to prevent table vibration or movement during shipment.
- The table brakes must be locked during shipment.

Table must always be equipped and operated with two (2) 12V sealed lead acid batteries available only through SKYTRON.

Certain accessories, such as the Uro-Drain Tray, Armboards, and X-Ray top, can be damaged when changing the position of the table top sections. Always look first to see if a desired movement is going to interfere with any accessories in use.

The operator has the ultimate responsibility of preventing damage to the table and surrounding equipment or possible injury to the patient or staff.

The operator must ensure proper positioning is maintained to prevent compromising respiration, nerve pathways, or circulation.

In general, use common sense to dictate when there is a potential hazard.

⚠ WARNING - Possible Pinch / Crush Points

Figure 1-1. Possible Pinch or Crush Points

1-2. Safety Precautions

The following is a summary of DANGERS, WARNINGS, and CAUTIONS denoted in this manual. These precautions are found throughout the manual where they are applicable. Carefully read the manual before proceeding to operate or service the equipment.

DANGER

Indicates a hazardous situation that, if not avoided, will result in death or serious injury.

WARNING

Indicates a hazardous situation that, if not avoided, could result in serious injury.

Prior to operating the table, observe all table precaution labels and review the SPECIAL USER ATTENTION section in the front of this manual.

The surgical table must be positioned in such a way that the operator can disconnect the power cord at the table or the electrical outlet.

The operator should remain positioned as shown in Figure 1-2 for proper patient observation and access to the emergency stop switch.

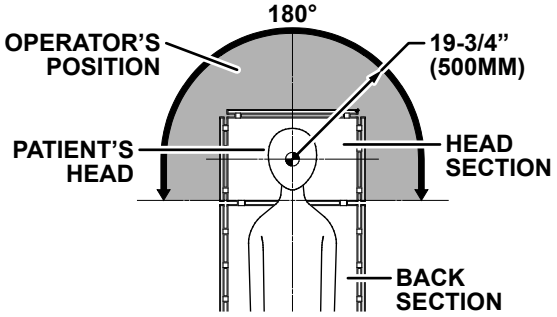

Figure 1-2. Operator's Position

Ensure brakes are properly set prior to patient transfer.

DO NOT use the table to transport a patient. There is a risk of injury to the patient and staff if the patient should fall during transport.

DO NOT use the table to transport heavy objects. There is a risk of injury to staff if the object should fall during transport.

To maximize patient safety, utilize proper restraint methods during extreme Trendelenburg positioning.

The table pad set must be in place and the patient must be positioned to avoid touching any of the metal sections of the table to protect against any possible electrical shock injury.

Consult with manufacturer's instructions when using high frequency surgical equipment, cardiace defibrillator, and cardiac defibrillator monitors. Improper operation procedures may cause a shock hazard or cause an equipment malfunction.

When an antistatic pathway is required, the table has to be used on an antistatic floor.

The antistatic properties of the table are dependent on the use of the original pad set which was furnished with the table or an alternate approved replacement.

Personal injury to patient or staff may result from a lack of proper maintenance of this equipment.

Always follow OSHA/EASHW blood-borne pathogens standards for protective clothing, including gloves, masks, and eye protection when cleaning the surgical table.

DO NOT disassemble or modify the table. Unauthorized disassembly may cause electric shock or malfunction.

Consult with Skytron before reversing a patient on the table.

⚠ CAUTION

Indicates a hazardous situation that, if not avoided, could result in minor or moderate injury.

Remove possible obstacles before lowering or tilting the operating table.

DO NOT place objects on the base of the table. Risk of injury and damage exists during positioning.

DO NOT unlock brakes when a patient is on the table. An uneven patient weight load may cause instability.

If circumstances demand table brakes to be unlocked:

- **Patient must be centered and evenly distributed on the table top (i.e., supine or prone position) with the table lowered to its lowest height position.**
- **The maximum patient weight should not exceed 500 pounds (227 kg).**
- **Table top rotation must be in normal orientation with the back section over the long end of the table base.**
- **Patient's head must be on the head section. Head section must be attached in its normal orientation to the table's back section.**

Prior to unlocking brakes, check for obstructions on the floor that might prevent the table from moving smoothly to a new location. Re-lock the brakes immediately once the final position is reached and before commencing surgery. To move the table safely, one staff member should be positioned at the head end and one at the foot end. If the patient weight exceeds 250 pounds (114 kg), four (4) staff members are required to move the table and ensure patient safety. If patient weight exceeds 500 pounds (227 kg), the brakes should remain locked at all times.

Use the emergency stop switch for emergency situations only! Pressing the emergency stop switch will remove power from the hydraulic system to stop all motion.

The safety interlock system is not operational when the emergency back-up control switches are used.

The EMERGENCY BRAKE LOCK switch does not activate the brake system timer. The switch must be held until the brakes are completely locked (approximately 10 seconds).

DO NOT unlock brakes when a patient is on the table. An uneven patient weight load may cause instability.

DO NOT reverse the patient on the table without first consulting with SKYTRON product management.

Ensure that the leg and back sections are properly engaged and secured to pins before use to prevent injury.

Always lock the table top in position after rotation. DO NOT rotate the top with an unevenly distributed patient weight load as instability may result.

⚠ CAUTION (CONT'D)

Make sure the TOP ROTATION LOCK HANDLE is tightened and the brakes are set before transferring the patient.

Exercise caution with the table top rotated 90° to the base since an improperly distributed patient load may cause the table to be tipped over. A table support rod is required for 90° positioning.

Certain accessories may limit weight capacities. Check with your SKYTRON representative.

SKYTRON products are guaranteed for proper performance with the use of genuine SKYTRON accessories.

Accessories and products not furnished by SKYTRON have not been tested for proper performance and safety. Such applications or use are at the discretion of the user to ensure patient and staff safety.

DO NOT use worn or damaged accessories; they represent an injury hazard.

Compliance with IEC60601-1 edition 3 has been confirmed without the pad set.

DO NOT use the table if any of the inspection points fail.

Always inspect product prior to use to ensure safe and correct operation. Any product deemed to be malfunctioning should be removed from service immediately and labeled inoperable.

Refer all service to a SKYTRON authorized service representative.

CAUTION

CAUTION without the safety alert symbol, is used to address practices not related to personal injury but with a possibility of damage to equipment.

The leg section may hit the table base or the floor if both the leg and elevation systems are placed in their full down position.

Caution should be taken when cleaning the table to prevent excessive fluid entry into electrical connectors.

Thoroughly read and follow the manufacturer's directions for all cleaning fluids. DO NOT use cleaners containing phenolics.

When using spray cleaners, DO NOT spray fluids directly into electrical receptacles or components.

Before replacing pads on the table, make sure the pads and all mating surfaces are completely dry. Moisture trapped between the pads and mating surfaces may cause distortion of table tops.

Avoid immersing the pendant control assembly in liquids.

If the table is stored for a period greater than 6 months, the batteries should be removed and stored in a dry, clean condition at a storage temperature of 68°F (20°C). Batteries should be re-charged every 6 months of product storage.

Any parts or assemblies not listed in this section must be serviced or replaced by SKYTRON authorized service personnel only. This is necessary to avoid the possibility of damage to the equipment.

NOTICE

Indicates important information not related to personal injury.

SECTION 2. EQUIPMENT SPECIFICATIONS

2-1. Intended Use

This surgical table is intended for use by healthcare professionals for human medical purposes only.

The surgical table is not intended to be used for patient transport.

2-2. Installation

Prior to placing the table into use, the following items must be inspected, verified, and calibrated by an authorized Skytron representative:

- Final initialization and completion of the installation report is required for warranty validation.
- Functional testing and cycling
- Electrical safety testing to include verification by hospital personnel
- Digital calibration of the hydraulic system's pressure relief valve (PRV)
- Inspection of the hydraulic system
- Table must be allowed to acclimate to usage climate requirements
- Verification of hydraulic fluid level
- Table has been wiped down to remove rust inhibitor

Items found to be non-conforming must be addressed prior to placing the table into service.

2-3. Environmental Conditions

a. During Transport and Storage (In Original Packaging Materials)

- *Ambient Temperature:* 14° to 122°F (-10° to 50°C)
- *Relative Humidity:* 10% to 85% (No Condensation)
- *Atmospheric Pressure:* 21 in-Hg to 31 in-Hg (700 hPa - 1060 hPa)
- During Use
- *Ambient Temperature:* 50° to 104°F (10° to 40°C)
- *Relative Humidity:* 30% to 75% (No Condensation)
- *Atmospheric Pressure:* 21 in-Hg to 30 in-Hg (700 hPa to 1000 hPa)

NOTICE

Operating altitude is 6562 feet (2000 m) max. above sea level.

2-4. Certification

Certified by ETL to these standards:

Medical electrical equipment, Part 1: General requirements for basic safety and essential performance ANSI/AAMI ES60601-1:2005 + C1:2009 + A2:2010 /(R)2012

Medical electrical equipment–Part 1: General requirements for basic safety and essential performance CAN/CSA-C22.2 No. 60601-1:08 + COR 2: 2011/06/01

Medical electrical equipment Part 2-46: Particular requirements for the basic safety and essential performance of operating tables IEC 60601-2-46: 2010

2-5. Classification

Class I Equipment

Applied Parts: Table Top/Type B Applied Parts

IPX4 Rated

- Equipment not suitable for use in the presence of flammable anesthetic mixture with AIR, OXYGEN, or NITROUS OXIDE.
- This product is not intended for sterilization.

2-6. Electrical Specifications

Power Requirements: 100 - 240 VAC, 50 - 60 Hz, 400 VA

Current Leakage: Less than 500 micro amps

Power Cord: 15 foot (4.5 m) w/ hospital grade connector (removable)

Duty Cycle: 3 min on, 7 min off

Battery Power: 24 VDC (12Vx2) Model: FML12170-12V17Ah/Furukawa Battery OR PS-12180 F2 12V18Amp.Hr/PowerSonic (SKYTRON Part Number : E0002293)

2-7. Mechanical Specifications

Maximum Lifting Capacity: 1200 lbs (540 kg)

Maximum Articulating Capacity: 1000 lbs (450 kg)

Unit Weight: 750 lbs (340 kg)

Maximum Patient Weight: (1200 lbs (540 kg)

2-8. Movement Over Threshold

Height 0.39" (10mm) / Width 3.15" (80mm); 1.312 f/s (0.4 m/s)

2-9. Dimensions

Refer to Figure 2-1 for an illustration of the 6702 table and its key dimensions.

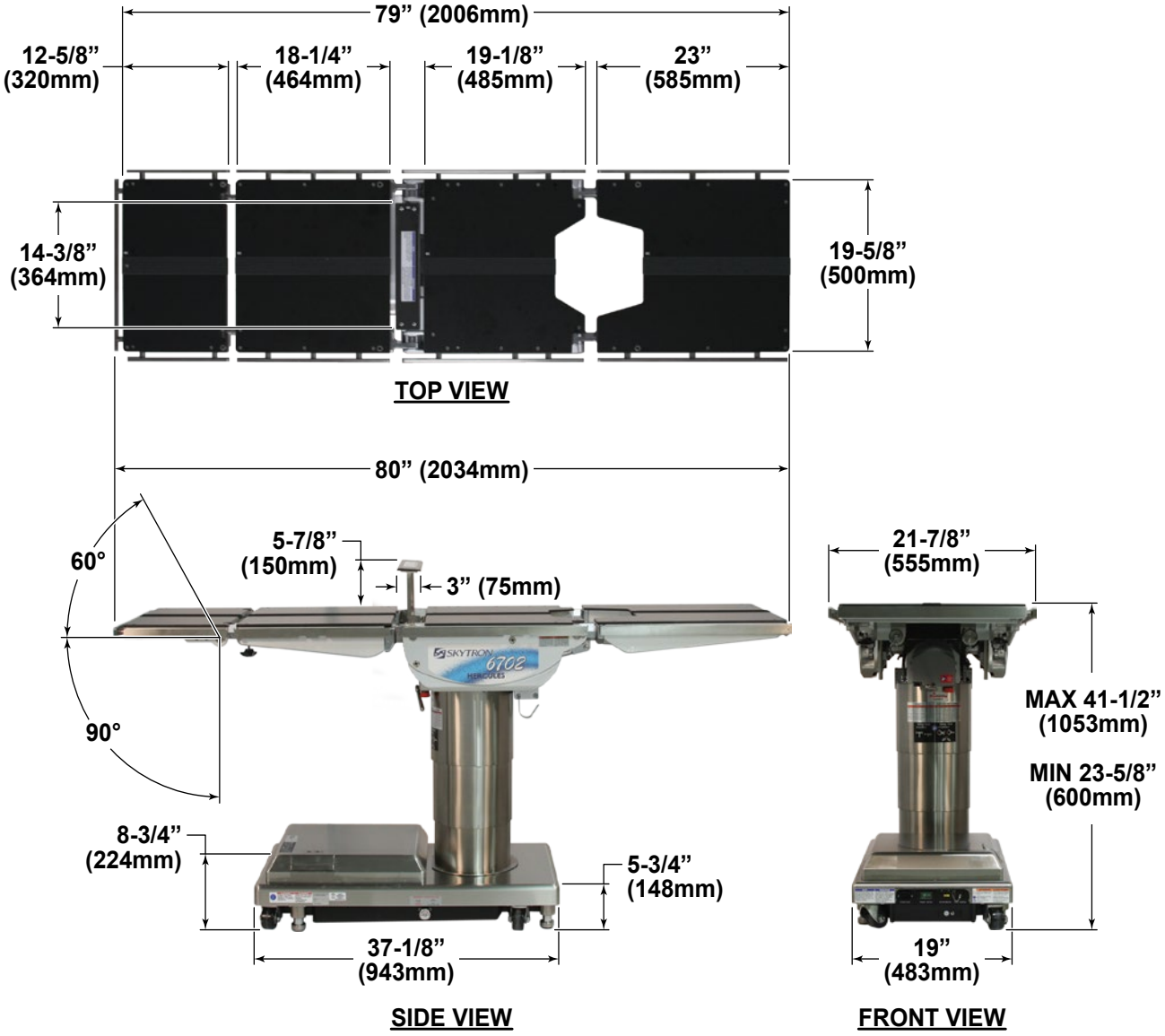

Figure 2-1. 6702 Table Dimensions

2-10. Equipment Labels

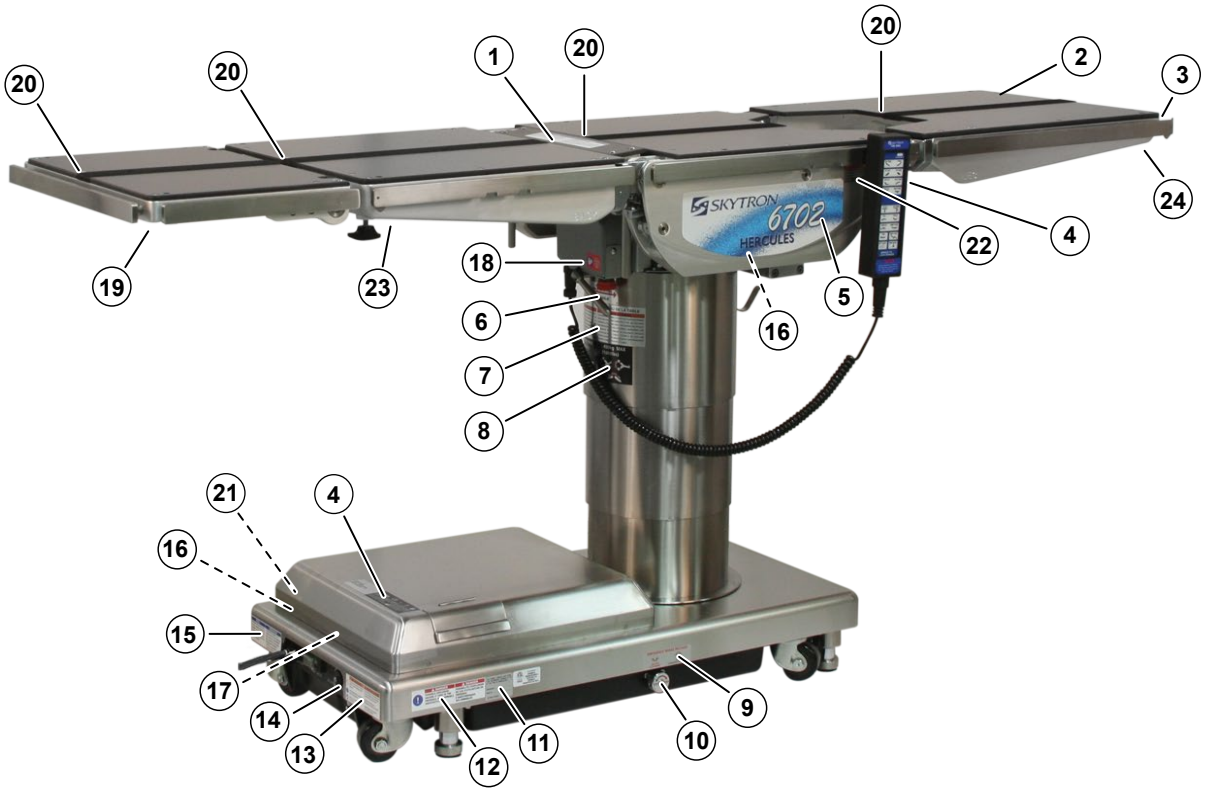

1 C656739A

NOTE	REMARQUE
DUE TO INTERLOCK SYSTEM, BACK SECTION CANNOT BE RAISED ABOVE HORIZONTAL WHEN KIDNEY LIFT IS RAISED.	EN RAISON DU SYSTÈME D'INTERVERROUILLAGE, L'APPUI DORSAL NE PEUT PAS ÊTRE ÉLEVÉ AU-DESSUS DE L'HORIZONTALE LORSQUE L'ÉLÉVATEUR RÉNAL EST SOULEVÉ.

2 C656312A

⚠ WARNING	⚠ MISE EN GARDE
USE HEAD SECTION AS FOOT EXTENSION ONLY - WHEN REVERSING PATIENT ON TABLE REFER TO OPERATOR MANUAL.	UTILISER LA PARTIE AVANT UNIQUEMENT COMME RALLONGE DE PIED – CONSULTER LE MANUEL D'UTILISATION AU MOMENT DE RETOURNER LE PATIENT SUR LA TABLE.

3 C656311A

⚠ WARNING	⚠ MISE EN GARDE
DO NOT SIT ON END OF LEG SECTION(S) AS LOADS IN EXCESS OF 140 LBS (63 KG), WILL CAUSE INSTABILITY THAT COULD CAUSE THE TABLE TO BE TIPPED OVER.	NE PAS S'ASSOIR SUR LE(S) BORD(S) DE LA TABLE CAR UNE CHARGE DE PLUS DE 63 KG (140 LBS) PEUT ENTRAÎNER UNE INSTABILITÉ ET FAIRE BASCULER LA TABLE.

4 C653617D

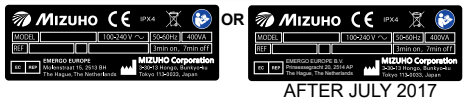

AFTER JULY 2017

5 C656748A

6 C610501A

7 C656309B

TABLE TOP	PLATEAU DE LA TABLE
⚠ WARNING	⚠ MISE EN GARDE
ALWAYS LOCK THE TABLE TOP IN POSITION AFTER A FULL ROTATION OF 180°. DO NOT ROTATE THE TOP WITH AN UNDISTRIBUTED PATIENT LOAD AS INSTABILITY MAY RESULT. EXERCISE CAUTION WITH THE TABLE TOP ROTATED 90° TO THE BASE RAISED AS IMPROPERLY DISTRIBUTED PATIENT LOAD MAY CAUSE THE TABLE TO BE TIPPED OVER.	TOUJOURS BRANCHER LA TABLE EN POSITION FERMÉE APRÈS UNE ROTATION COMPLÈTE À 180°. NE PAS PAS PAS TOURNER LE PLATEAU AVEC UNE CHARGE DE PATIENT NON RÉPARTIE. CAR CELA POURRAIT ENTRAÎNER UNE INSTABILITÉ. PRÊTE PRÉCAUTION AVEC LE PLATEAU DE LA TABLE TOURNÉ À 90° CAR UNE CHARGE DE PATIENT NON RÉPARTIE IMPROPREMENT POURRAIT FAIRE BASCULER LA TABLE.

8 C656721A

9 C653515A

10 C653516B

11 C656715A

12 C656738A

⚠ DANGER	⚠ DANGER
POSSIBLE EXPLOSION HAZARD IF USED IN THE PRESENCE OF FLAMMABLE ANESTHETICS.	POSSIBILITÉ D'EXPLOSION EN CAS D'UTILISATION EN PRÉSENCE D'ANESTHÉSIQUES INFLAMMABLES.

13 C656740A

⚠ WARNING	⚠ MISE EN GARDE
TO REDUCE THE RISK OF ELECTRIC SHOCK, DO NOT REMOVE COVER OR BACK.	NE PAS RETIRER LE COUVERCLE OU LA FACE ARRIÈRE AFIN DE RÉDUIRE LE RISQUE D'ÉLECTROCUTION.
REFER SERVICING TO QUALIFIED SERVICE PERSONNEL.	CONFIER L'ENTRETIEN AU PERSONNEL DE SERVICE QUALIFIÉ.
REFER TO ACCOMPANYING DOCUMENTS.	SE RÉFÉRER AUX DOCUMENTS D'ACCOMPAGNEMENT.

14 C653513A

15 C656741A

NOTE	REMARQUE
GROUNDING RELIABILITY CAN ONLY BE ACHIEVED WHEN THE EQUIPMENT IS CONNECTED TO AN EQUIVALENT RECEPTACLE MARKED "HOSPITAL ONLY" OR "HOSPITAL GRADE".	LA FIABILITÉ DE MISE À LA TERRE NE PEUT ÊTRE OBTENUE QUE LORSQUE L'ÉQUIPEMENT EST CONNECTÉ À UNE PRISE ÉQUIVALENTE REPÉRÉE "HÔPITAL UNIQUEMENT" OU "QUALITÉ HÔPITAL".

16 C653512A

18 C653614A

19 C653622B (US) or C653634B (EU)

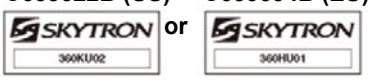

23 C656743B (US) or C656745B (EU)

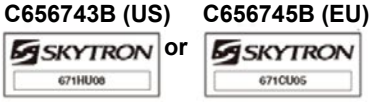

17 C653525A

⚠ REPLACE BATTERIES ONLY WITH SKYTRON REPLACEMENT PART 24V(12×2)-17Ah

20 C653620A

21 C653623A

22 C653624A

⚠ WARNING	⚠ MISE EN GARDE
A Patient shall be set up to more than 1cm apart from a side rail so that a patient does not touch on side rails.	Un malade sera mis loin du rail du côté plus que 1cm afin qu'unmalade ne touche pas le rail du côté.

24 C656742B (US) or C656753B (EU)

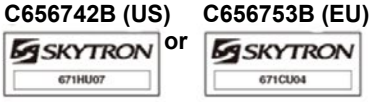

2-11. Label Symbols

Symbol	Description	Used On Product	Used In Manual
NOTICE	Indicates important facts or helpful hints.		•
ISO 7010-W001	General warning sign (e.g., WARNING, CAUTION)	•	•
IEC 60417-5840	Type B applied part	•	
IPX4 IEC 60529	Enclosure class (Splash-proof)	•	
WEEE	Indicates waste disposal information	•	
ISO 7010-M002	Refer to instruction manual	•	
IEC 60417	Alternating current	•	
REF ISO 15223-3.15	Catalogue number	•	
SN ISO 15223-3.16	Serial number	•	
EC REP EN980-5.13	AUTHORIZED REPRESENTATIVE IN THE EUROPEAN COMMUNITY	•	•
EN980-5.12	Manufacturer	•	•
IEC 60417-5021	Equipotentiality	•	
ISO 7010-P001	General prohibition sign	•	
ISO 7010-M001	General mandatory action sign	•	
IEC 60417-5638	Emergency stop	•	
IEC 60417-5019	Protective earth (ground)	•	

SECTION 3. OPERATION

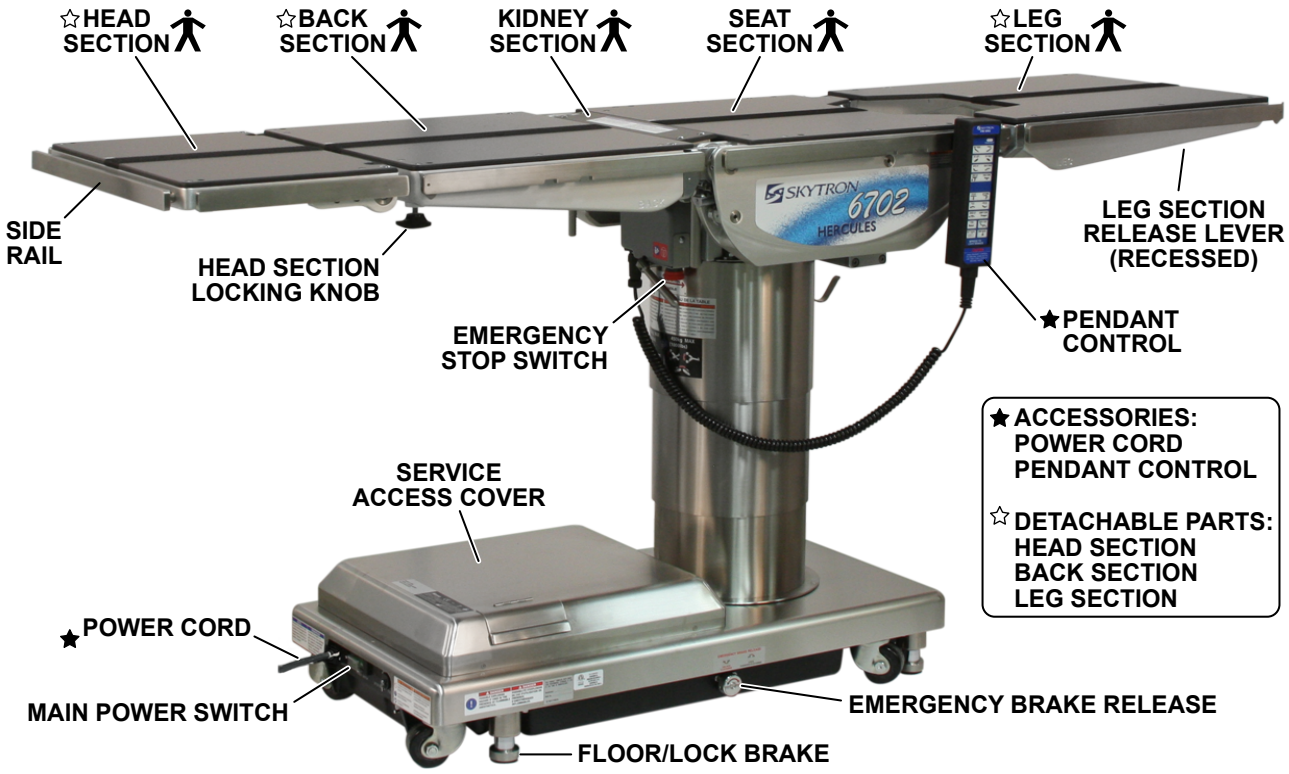

Figure 3-1. 6702 Surgical Table

3-1. General

The 6702 HERCULES surgical table is an electro-hydraulically operated, general purpose surgical table (Figure 3-1).

The electro-hydraulic positioning functions that are operated by the hand-held, push button, pendant control are:

- Trendelenburg
- Lateral Tilt
- Back Section
- Elevation
- Leg Section
- Flex/Reflex
- Kidney Lift
- Return-to-Level
- Beach Chair
- Floor Lock/Brake

Manual controls are provided for head section positioning, table top rotation, emergency brake release, back section removal, and leg section removal.

3-2. Power Requirements

The 6702 table requires a 100 - 240 VAC, 50/60 Hz electrical power supply. The table is equipped with a removable 15 foot (4.5 m) long power cord with an approved, hospital grade plug. The main power ON/OFF switch (POWER SWITCH) is located on the panel on the front edge of the table base (Figure 3-2).

NOTICE

The battery charging indicator (BATTERY INDICATOR) and foot control connector are also located on the electrical panel.

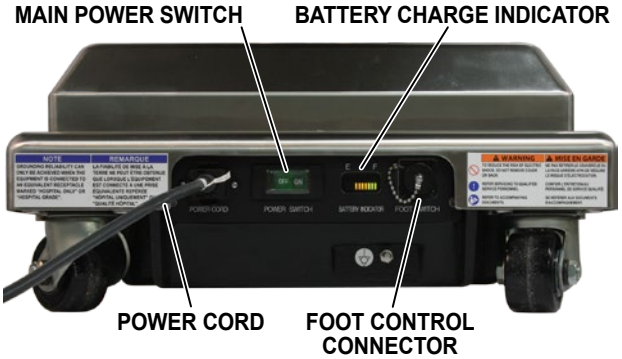

Figure 3-2. Electrical Panel

3-3. Pendant Control

The hand-held pendant control (Figure 3-3) has a non-slip rubber cover which assures a positive grip during use. A spring clip hanger is located on the back of the control for storage. When the pendant control is not in use, it should be stored on a convenient side or end rail.

Figure 3-3. Pendant Control

The function push buttons are identified with internationally recognized symbols and abbreviated descriptions for all functions. When illuminated, the Trendelenburg (TREND) and TABLE UP buttons are red, the remaining buttons are all green (Figure 3-4).

Figure 3-4. Function Buttons

NOTICE

If any of the buttons on the pendant control are pressed continuously for longer than 4 minutes, the thermal protector of the solenoid valve will actuate and the operation will be stopped. The thermal protector will reset in approximately 30 minutes.

3-4. Floor Lock/Brake System

The floor lock/brake system consists of four (4) self-leveling, hydraulic brake cylinders which raise and support the table base off from the casters. Press the TABLE UP button on the pendant control to set the table's brakes. An electronic timer will activate the brake system until the brakes are completely set (approximately 8-10 seconds).

NOTICE

Activating any function button will activate the brake system. Using the TABLE UP function to set the brakes provides a visual assurance that the brakes are locked without altering the table position, except when the emergency brake is released.

Pressing the BRAKE UNLOCK button on the pendant control will retract the hydraulic brake cylinders, lowering the table base onto the casters for mobility.

3-5. Electrical Power

The 6702 table will operate on either AC or battery power.

⚠ WARNING

Prior to operating the table, observe all table precaution labels and review the SPECIAL USER ATTENTION section in the front of this manual.

Possible explosion hazard exists if table is used in the presence of FLAMMABLE ANESTHETICS.

NOTICE

An equalization terminal is located under the main power panel. This is provided as an alternate pathway to reduce the risk of static shock hazards. Always follow recommended grounding procedures to ensure patient and staff safety.

3-6. AC Operation

Use the following instructions to operate the table on AC power.

WARNING

The surgical table must be positioned in such a way that the operator can disconnect the power cord at the table or the electrical outlet.

1. Make sure the power cord is securely attached to the table. To install the power cord, align the cord connector with the base connector (POWER CORD), insert the cord into the connector until it locks in place (Figure 3-5).

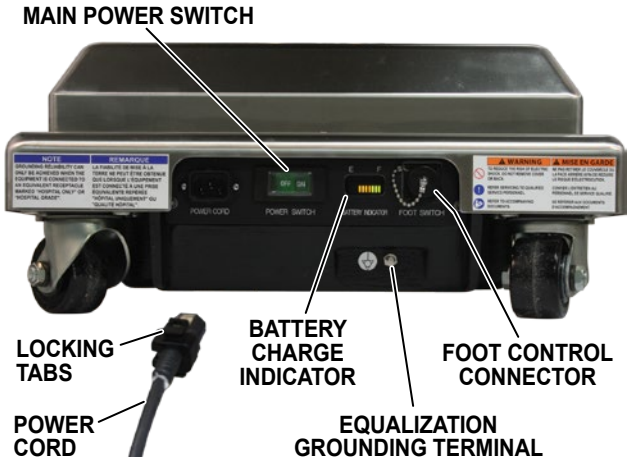

Figure 3-5. Electrical Panel

NOTICE

To remove the power cord, depress the top and bottom locking tabs and pull the cord connector out of the base connector.

2. Plug the cord into a properly grounded, Hospital Grade, AC outlet. Make sure the power cord is routed to the outlet to prevent it from being in the way of operating personnel.

NOTICE

Ground reliability can only be achieved when the equipment is connected to a properly grounded receptacle. Where the integrity of the external protective earth ground is compromised, equipment must be operated in battery mode.

3. Place the main power switch (POWER SWITCH) in the ON position. The switch will illuminate. The pendant control buttons and the green AC, POWER indicator light, located in the upper right corner of the pendant control, will illuminate (Figure 3-6).

Figure 3-6. Pendant Control (AC Power)

4. The table is now ready for AC operation.

NOTICE

Use only SKYTRON replacement parts for the power cord and pendant control. Refer to: Section 5. Replacement Parts.

3-7. Battery Operation

1. Make sure the main power switch (POWER SWITCH) indicator light is OFF. If the indicator light is ON (AC Power ON), place the main power switch (POWER SWITCH) in the OFF position (Refer to Figure 3-5).

NOTICE

Prior to all surgical procedures, make sure the battery charge is sufficient for anticipated duration and use.

The table will operate correctly on battery power with the power cord connected to a wall outlet or disconnected.

2. Press the BATT ON/OFF button on the pendant control. The pendent control buttons, the green and red BATTERY indicator lights on the upper right corner of the pendent control, and the battery charge indicator on the electrical panel will illuminate (Figure 3-5 and Figure 3-7).

3. The table is now ready for battery operation. To extend the battery charge life when the table is not in use, press the BATT ON/OFF button on the pendant control to turn the battery power OFF.

NOTICE

Battery operation must be turned OFF at the pendant control. It cannot be turned OFF using the main power switch (POWER SWITCH) on the electrical panel.

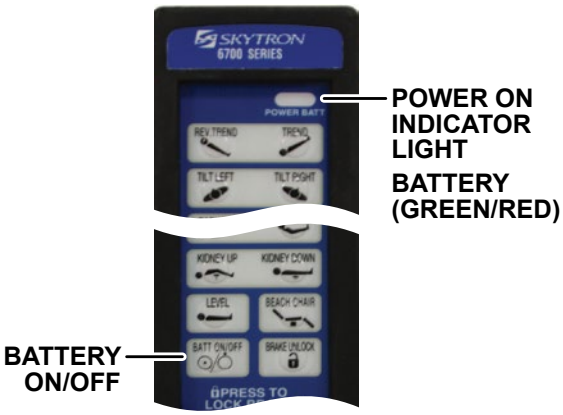

Figure 3-7. Pendant Control (Battery Power)

3-8. Automatic Shut-Off

To prevent unnecessary discharge of the battery, a timer is built into the battery circuit. This timer will automatically shut the battery power OFF after 2 hours of table inactivity.

To turn the table ON again, press the BATT ON/OFF button on the pendant control. The pendant control buttons and the green and red BATT indicator lights will illuminate.

NOTICE

Placing the main power switch (POWER SWITCH) in the ON position will change the table operation to AC power.

3-9. Charging the Batteries

Batteries should be charged:

- When the table is placed into initial service
- As indicated by BATTERY CHARGE INDICATOR on the electrical panel
- Every week under normal service conditions

In battery mode, three (3) green LEDs, four (4) yellow LEDs, and three (3) red LEDs on the BATTERY CHARGE INDICATOR are turned on sequentially according to the charge state (Figure 3-7).

In charging mode, three (3) green LEDs, four (4) yellow LEDs, and one (1) red LED are turned on sequentially, then turned off, and then turned on sequentially. The following tables show the battery charge level as indicated by the lighted bars.

Battery Mode

Indicator Status	Percent Charge
4 Yellow - 3 Green	100% (Fully charged)
4 Yellow - 2 Green	89% (Charged)
4 Yellow - 1 Green	78% (Charged)
4 Yellow	67% (Charged)
3 Yellow	56% (Charged)
2 Yellow	45% (Needs-Charging: BATT indicator on pendant will flash)
1 Yellow	34% (Needs-Charging: BATT indicator on pendant will flash)
3 Red	23% (Needs-Charging: BATT indicator on pendant will flash)
2 Red	12% (Needs-Charging: BATT indicator on pendant will flash)
1 Red	1% (Needs-Charging: inoperable)

Charging Mode

Indicator Status	Percent Charge
1 Yellow	34% (Charging)
2 Yellow	45% (Charging)
3 Yellow	56% (Charging)
4 Yellow	67% (Charging)
4 Yellow - 1 Green	78% (Charging)
4 Yellow - 2 Green	89% (Charging)
4 Yellow - 3 Green	100% (Fully charged)
1 Red	Fuse requires replacment (contact SKYTRON Service)

Error Mode

Indicator Status	Error
2 Red	Fuse requires replacment (contact SKYTRON Service)

NOTICE

When the red BATT indictor light starts to blink (indicating low power in battery), the table will operate for approximately 5 continuous minutes (typically long enough to use the table for the rest of the day).

The charging system operates ONLY when the table is in AC operation mode. The table can be operated on AC power while the battery is being charged.

If the battery needs to be charged when operating the table on battery power, the red BATT indicator light on the pendant control will begin to blink.

To recharge the battery, make sure the power cord is connected, plugged into a AC wall outlet, and the main power switch (POWER SWITCH) is ON.

A full battery charge will last approximately 2 weeks under normal operating conditions. However, it is recommended to charge the batteries at the end of each week to establish a normal routine protocol. Lead acid batteries last longer if they are not permitted to fully discharge.

The table has two (2) 12 volt, sealed, lead acid batteries which require no manual maintenance. Lead acid gel batteries, under a proper charging program, feature an approximate normal life of 4 years.

The batteries must be properly maintained to ensure proper operation of the table in the event of an AC power supply failure.

3-10. Positioning Functions

The hand-held pendant control activates the following table functions (Figure 3-8).

Figure 3-8. Pendant Control Function Buttons

WARNING

The operator should remain positioned as shown in (Figure 3-9) for proper patient observation and access to the emergency stop switch.

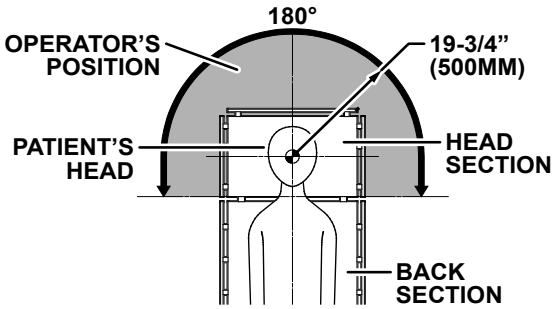

Figure 3-9. Operator's Position

Press appropriate function button to activate positioning. Positioning will stop when the button is released.

NOTICE

With an evenly distributed patient weight load up to 1000 pounds (450 kg), all table positioning functions will operate smoothly and quietly.

Use the following instructions to shut the table down (if needed).

In Battery Mode:

Push the pendant control BATT ON/OFF button.

In AC Mode:

1. Unplug the power cord from AC outlet
2. Table will switch to battery mode.
3. Push the pendant BATT ON/OFF button.

In Emergency Situation:

Push the emergency stop switch. An audible alarm will sound.

a. Floor Lock/Brake System

WARNING

Ensure brakes are properly set prior to patient transfer.

To activate the brakes without affecting table positioning, press the TABLE UP button. The elevation cylinder will not function until the brakes are completely extended (Figure 3-10).

Press the BRAKE UNLOCK button on the pendant control to release the four (4) self-leveling brake feet in order to move the table.

The brake delay circuit automatically retracts the brake system. It takes approximately 7-8 seconds to totally release the system.

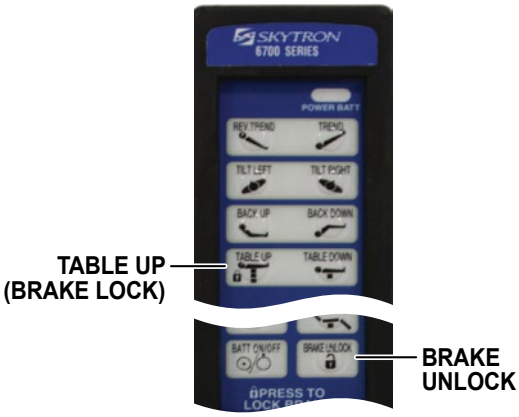

Figure 3-10. Brake System Activation

⚠ CAUTION

DO NOT unlock brakes when a patient is on the table. An uneven patient weight load may cause instability.

If circumstances demand table brakes to be unlocked:

- **Patient must be centered and evenly distributed on the table top (i.e., supine or prone position) with the table lowered to its lowest height position.**
- **Maximum patient weight should not exceed 500 pounds (227 kg).**
- **Table top rotation must be in normal orientation with the back section over the long end of the table base.**
- **Patient's head must be on the head section. Head section must be attached in its normal orientation to the table's back section.**

Prior to unlocking brakes, check for obstructions on the floor that might prevent the table from moving smoothly to a new location. Re-lock the brakes immediately once the final position is reached and before commencing surgery.

To move the table safely, one staff member should be positioned at the head end and one at the foot end. If the patient weight exceeds 250 pounds (114 kg), four (4) staff members are required to move the table and ensure patient safety. If patient weight exceeds 500 pounds (227 kg), the brakes should remain locked at all times.

⚠ WARNING

DO NOT use the table to transport a patient. There is a risk of injury to the patient and staff if the patient should fall during transport.

DO NOT use the table to transport heavy objects. There is a risk of injury to staff if the object should fall during transport.

b. Trendelenburg

⚠ WARNING

To maximize patient safety, utilize proper restraint methods during extreme Trendelenburg positioning.

To place the table in a Trendelenburg (head down) position, press the TREND button. Trendelenburg positioning of up to 30° may be obtained (Figure 3-11).

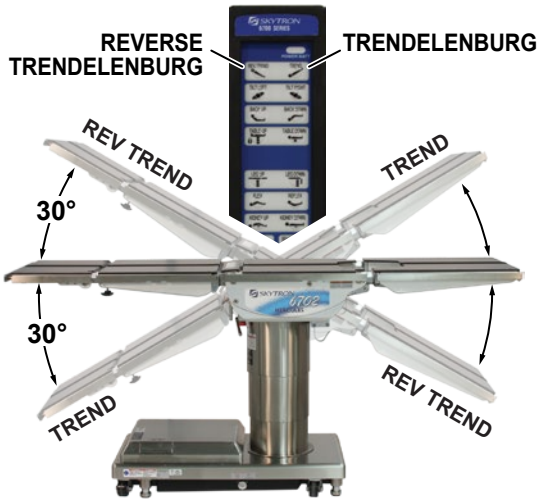

Figure 3-11. Trendelenburg Positioning

To place the table in a reverse Trendelenburg (head up) position, press the REV TREND button. Reverse Trendelenburg positioning of up to 30° may be obtained.

c. **Lateral Tilt**

WARNING

To maximize patient safety, utilize proper restraint methods during extreme lateral tilt positioning.

To achieve lateral tilt right (as viewed from the head end of the table), press the TILT RIGHT button. Tilt of up to 30° may be obtained (Figure 3-12).

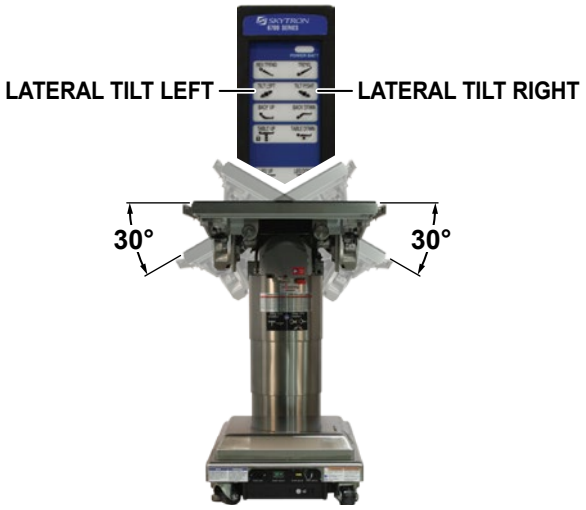

Figure 3-12. Lateral Tilt Positioning

To achieve lateral tilt left, press the TILT LEFT button. Tilt of up to 30° may be obtained.

d. Back Section

To raise the back section, press the BACK UP button. The back section will raise up to 90° above horizontal (Figure 3-13).

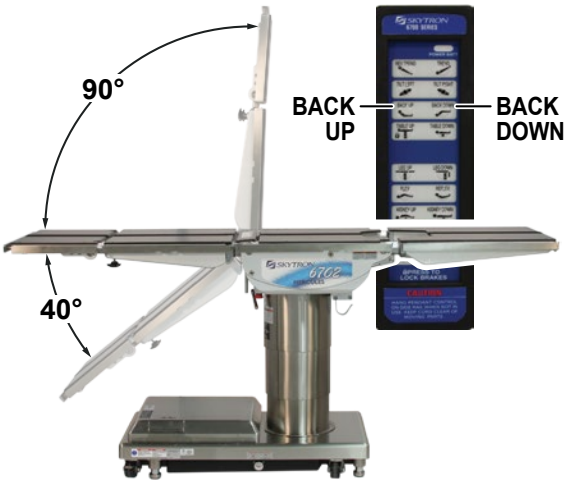

Figure 3-13. Back Section Positioning

To lower back section, press the BACK DOWN button. The back section will lower to 40° below horizontal.

NOTICE

To prevent damage to the kidney lift, a safety interlock prevents the back section from going above horizontal if the kidney lift is not all the way down. An audible alarm will sound.

If the back section is below horizontal, BACK UP function is limited to 800 pounds (360 kg) patient weight.

e. Elevation

To raise the table top, press the TABLE UP button (Figure 3-14).

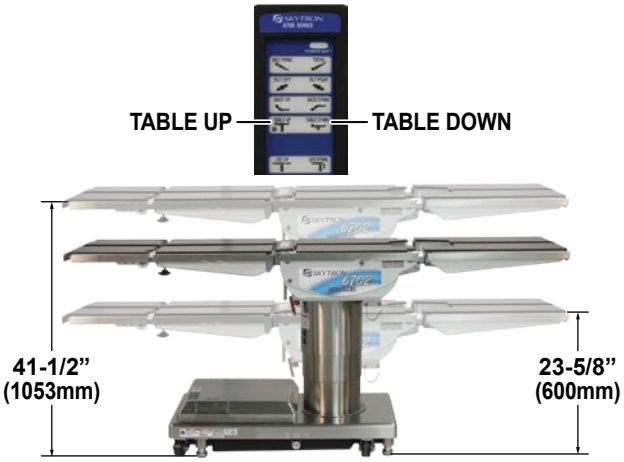

Figure 3-14. Elevation Function

The table will lift a patient weight of 1200 pounds (540 kg) up to a maximum height of 41-1/2 inches (1053 mm).

To lower the table top, press the TABLE DOWN button. The table top will go down to a minimum height of 23-5/8 inches (600 mm).

f. Leg Section

To lower the leg section, press the LEG DOWN button. The leg section will go down to 100° below horizontal (Figure 3-15).

Figure 3-15. Leg Section Positioning

To raise the leg section, press the LEG UP button. The leg section will go up to 20° above horizontal.

CAUTION

The leg section may hit the table base or the floor if both the leg and elevation systems are placed in their full down position.

g. Flex Positioning

To place the table top in a flex position from horizontal, press the FLEX button (Figure 3-16).

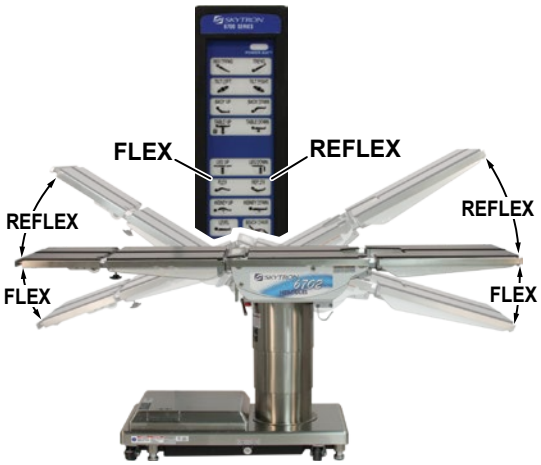

Figure 3-16. Flex / Reflex Positioning

To return the table top to a horizontal position or into a reflex position, press the REFLEX button.

NOTICE

When the REFLEX button is activated, if the kidney bridge is up, the back section will not go above horizontal.

h. Kidney Lift

To raise the built-in kidney lift, press the KIDNEY UP button (Figure 3-17). The kidney lift can be raised up to 5-7/8 inches (150 mm).

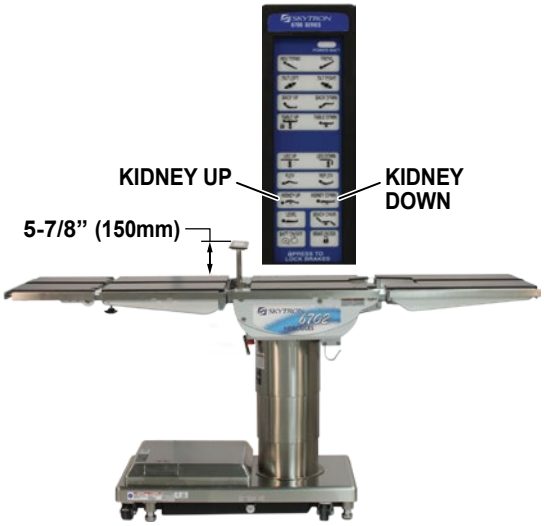

Figure 3-17. Kidney Lift Positioning

Press the KIDNEY DOWN button to lower the kidney lift.

NOTICE

Pressing the LEVEL button (Return To Level) will also lower the kidney lift.

To prevent damage to the kidney lift, a safety interlock prevents the kidney lift from going up if the back section is above horizontal. An audible alarm will sound.

i. Return To Level

To return the table top to a level position, press the LEVEL button (Figure 3-18).

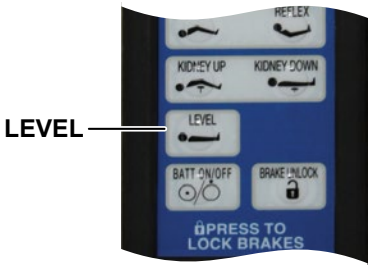

Figure 3-18. Return To Level

NOTICE

Elevation and brake system functions are not affected by the Return To Level function.

j. Beach Chair

To place the table top in the beach chair position from a level position, press the BEACH CHAIR button (Figure 3-19). The back section will raise, the leg section will lower, and the Trendelenburg position will function simultaneously. The functions will stop when Trendelenburg reaches its limit.

Figure 3-19. Beach Chair

NOTICE

To prevent damage to the kidney lift, a safety interlock prevents the beach chair function from operating if the kidney lift is not all the way down. An audible alarm will sound.

3-11. Emergency Stop Switch

An emergency stop switch is located under the table top, near the pendant control connector (Figure 3-20).

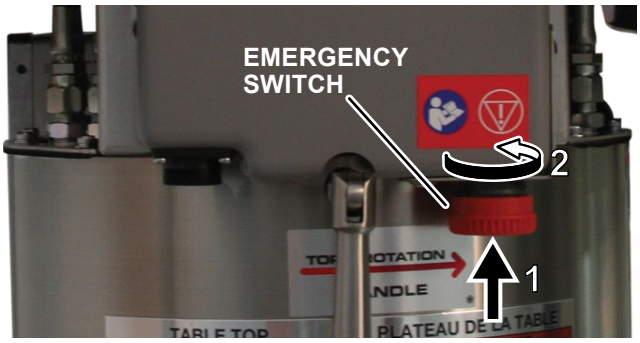

Figure 3-20. Emergency Stop Switch

⚠ CAUTION

Use the emergency stop switch for emergency situations only! Pressing the emergency stop switch will remove power from the hydraulic system to stop all motion.

1. In the event of a malfunction where a positioning function continues to operate, pressing the red emergency stop switch button will interrupt all power to the hydraulic pump. All positioning functions will stop and an audible alarm will sound.

2. When the emergency is cleared or the malfunction is addressed (corrected), turn or pull out the emergency stop switch button to release or reset the switch.

3-12. Emergency Back-up Controls

Emergency back-up control switches are located under the access door on the service access cover in the table base (Figure 3-21).

Figure 3-21. Emergency Controls Location

If the hand-held pendant fails to operate or is not functioning properly, the table can be operated using the emergency back-up switches. Simply push the desired emergency switch in the appropriate direction to operate the table functions (Figure 3-22).

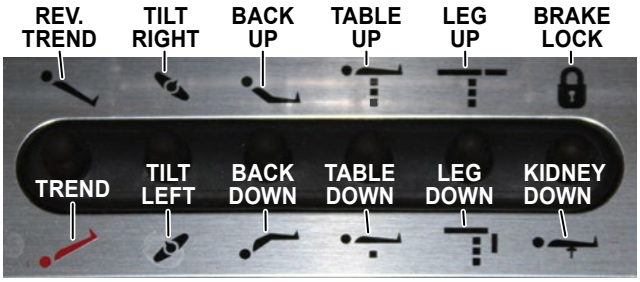

Figure 3-22. Emergency Back-Up Controls

CAUTION

The safety interlock system is not operational when the emergency back-up control switches are used.

The EMERGENCY BRAKE LOCK switch does not activate the brake system timer. The switch must be held until the brakes are completely locked (approximately 10 seconds).

NOTICE

The emergency back-up control switches will function when the table is operating on AC power or battery power.

Switches are provided for Trendelenburg, lateral tilt, back section, elevation, leg section, kidney down, and brake lock. These switches are spring-loaded so they return to the neutral or center position when released.

3-13. Emergency Brake Release

In case of power failure or an electrical problem in the table, the emergency brake release system can be used to manually release the brakes so the table can be moved. The control knob for this function is located on the side of the table base and identified by an EMERGENCY BRAKE RELEASE label. Turn the knob clockwise to release the brakes (Figure 3-23).

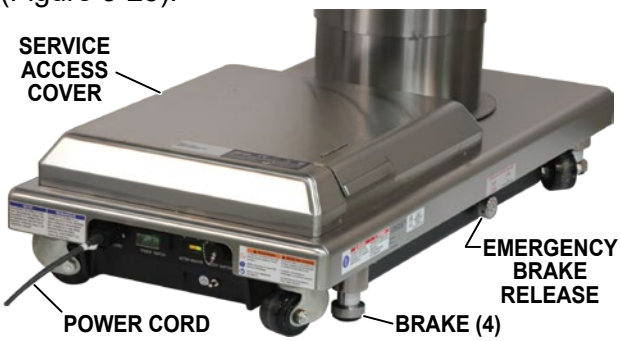

Figure 3-23. Emergency Brake Release

CAUTION

DO NOT unlock brakes when a patient is on the table. An uneven patient weight load may cause instability.

If circumstances demand table brakes to be unlocked:

- **Patient must be centered and evenly distributed on the table top (i.e., supine or prone position) with the table lowered to its lowest height position.**
- **Maximum patient weight should not exceed 500 pounds (227 kg).**
- **Table top rotation must be in normal orientation with the back section over the long end of the table base.**
- **Patient's head must be on the head section. Head section must be attached in its normal orientation to the table's back section.**

CAUTION

Prior to unlocking brakes, check for obstructions on the floor that might prevent the table from moving smoothly to a new location. Re-lock the brakes immediately once the final position is reached and before commencing surgery.

To move the table safely, one staff member should be positioned at the head end and one at the foot end. If the patient weight exceeds 250 pounds, (114 kg), four (4) staff members are required to move the table and ensure patient safety. If patient weight exceeds 500 pounds (227 kg), the table brakes should remain locked at all times.

NOTICE

The EMERGENCY BRAKE RELEASE valve (knob) must be closed and tightened (counter-clockwise) before activating any hydraulic function.

If the EMERGENCY BRAKE RELEASE valve (knob) has been operated, the BRAKE UNLOCK button on the pendant control will have to be pressed to reset the timer circuit before brakes will lock again.

3-14. Head Section

a. Adjustment

A quick release positioning bar is located under and to the front of the head section. This release bar is used to release the head section from its currently locked position so it can be manually raised or lowered (Figure 3-24).

Figure 3-24. Head Section Adjustment

Pull the release bar toward the head end to allow the section to pivot up or down. Positioning from 60° above horizontal to 90° below horizontal in 15° increments is available. Release the bar to lock the head section in position.

b. Removal/Installation

If desired, the head section may be removed by loosening the locking knobs and pulling it straight out of the back section (Refer to Figure 3-24).

CAUTION

DO NOT reverse the patient on the table without first consulting with SKYTRON product management.

The 6702 table is capable of attaching the head section to the leg section <u>for use as a foot extension ONLY</u>. Two (2) locking knobs are located on the inside of the leg section for securing the head section (Figure 3-25).

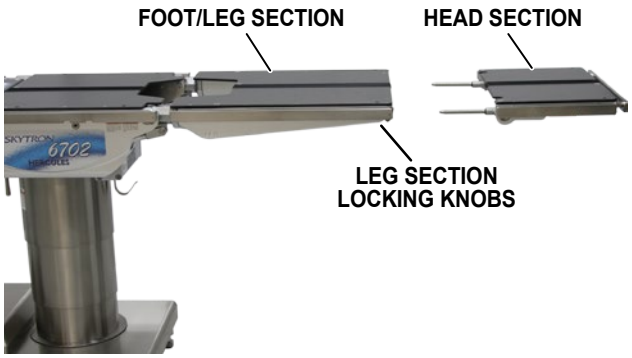

Figure 3-25. Head Section as a Foot Extension

3-15. Leg & Back Section Removal/Installation

CAUTION

Ensure that the leg and back sections are properly engaged and secured to pins before use to prevent injury.

The leg section and back section on the 6702 table are both removable - leg section shown (Figure 3-26).

Figure 3-26. Leg Section Removal/Installation

NOTICE

To make the back section easier to handle, remove the head section, pad, and X-ray top prior to removing the back section. Remove the pad and X-ray top prior to removing the leg section.

a. To remove either section:

1. Level the table top.
2. Simultaneously depress both release levers, then pull the section out.
3. Press the LEG DOWN or BACK DOWN button on the pendant control to position the attachment pins down and out of the way.

NOTICE

The leg and back sections are labeled for proper orientation. The leg section cannot be installed on the back section pins.

Leg and back section pins do not move at the same rate of speed with the section removed. Make sure both pins are completely stopped.

b. To install the leg section:

1. Press and hold the LEG UP button until both leg section attachment pins completely stop.
2. Install the leg section on the pins.
3. Level the table top and pull out on the leg section to back sure the release levers are completely locked.

c. To install the back section:

1. If the attachment pins are not aligned:
2. Make sure the table top is centered or towards the head end.
3. Press and hold the BACK DOWN button until the attachment pins completely stop .
4. Press REV TREND to bring the pins to a level position.
5. Install the back section on the pins.
6. Level the table top and pull out on the back section to make sure the release levers are completely locked.

3-16. Table Top Rotation

NOTICE

Normal table top position is with the head (and back) section over the power cord end of the base.

The table top can be horizontally rotated 210° without having to rotate the entire table.

⚠ CAUTION

Always lock the table top in position after rotation. DO NOT rotate the top with an unevenly distributed patient weight load as instability may result.

To rotate top, turn TOP ROTATION LOCK HANDLE counterclockwise to release, grasp the table by the head end and rotate the top counterclockwise. Lock the top in position by turning the TOP ROTATION LOCK HANDLE clockwise (Figure 3-27).

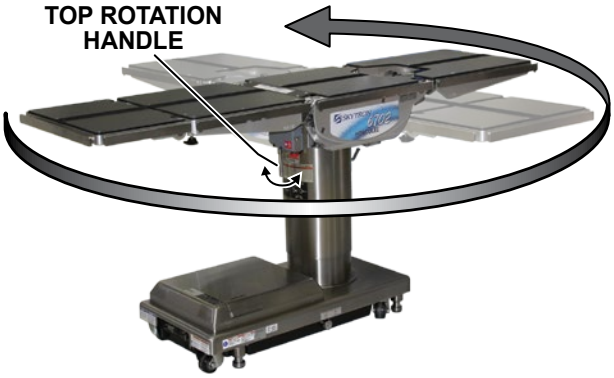

Figure 3-27. Top Rotation

The use of the optional support rod allows the table top to safely used to support a patient when the table is rotated 90° from the base (Figure 3-28).

Figure 3-28. 90° Top Rotation

⚠ CAUTION

Make sure the TOP ROTATION LOCK HANDLE is tightened and the brakes are set before transferring the patient.

Exercise caution with the table top rotated 90° to the base since an improperly distributed patient load may cause the table to be tipped over. A table support rod is required for 90° positioning.

3-17. Pad Sets

WARNING

The table pad set must be in place and the patient must be positioned to avoid touching any of the metal sections of the table to protect against any possible electrical shock injury.

WARNING

Consult with manufacturer's instructions when using high frequency surgical equipment, cardiace defibrillator, and cardiac defibrillator monitors. Improper operation procedures may cause a shock hazard or cause an equipment malfunction.

WARNING

When an antistatic pathway is required, the table has to be used on an antistatic floor.

The antistatic properties of the table are dependent on the use of the original pad set which was furnished with the table or an alternate approved replacement.

The SKYTRON pad set provides protection for the patient from the metal surfaces of the table to help protect against possible electrical shock from cardiac defribrillators or electro-surgical devices.

CAUTION

Compliance with IEC60601-1 edition 3 has been confirmed without the pad set.

The SKYTRON pad sets are available in 2 inch (51 mm) or larger thickness and have a velcro strip which holds them in place on the table surface. Make sure the pad set is positioned on the table top properly and that no top section screws are exposed prior to patient transfer.

3-18. Positioning

The use of certain optional accessories available from SKYTRON further extend the positioning capabilities of the 6702 table.

CAUTION

Certain accessories may limit weight capacities. Check with your SKYTRON representative.

CAUTION

SKYTRON products are guaranteed for proper performance with the use of genuine SKYTRON accessories.

Accessories and products not furnished by SKYTRON have not been tested for proper performance and safety. Such applications or use are at the discretion of the user to ensure patient and staff safety.

CAUTION

DO NOT use worn or damaged accessories; they represent an injury hazard.

Refer to the following "General Purpose Patient Positioning Guidelines" or contact your SKYTRON representative for further details.

6702 General Purpose Patient Positioning Guidelines

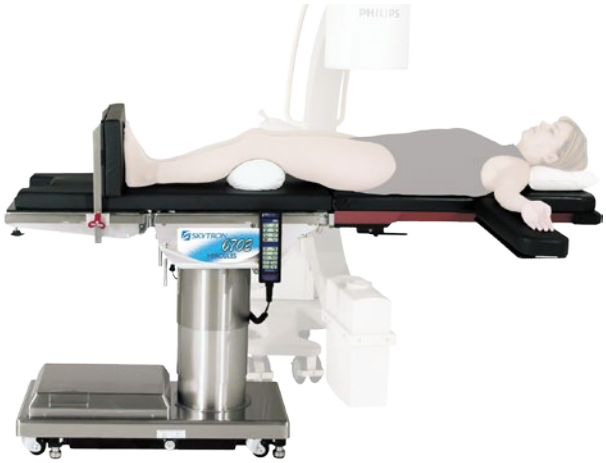

Upper Body Imaging

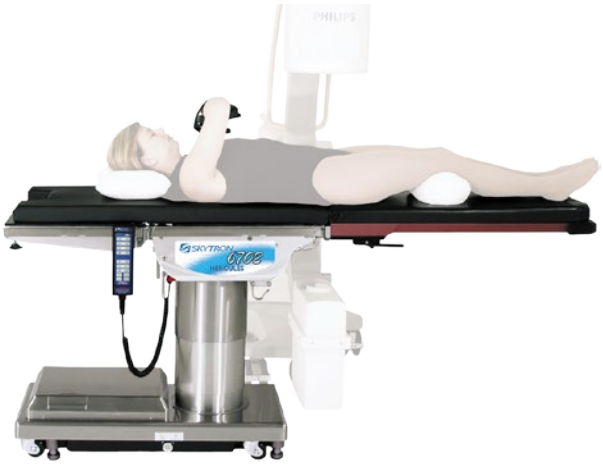

Lower Body Imaging

Lap Nissen

Urology

Ophthalmic/ENT

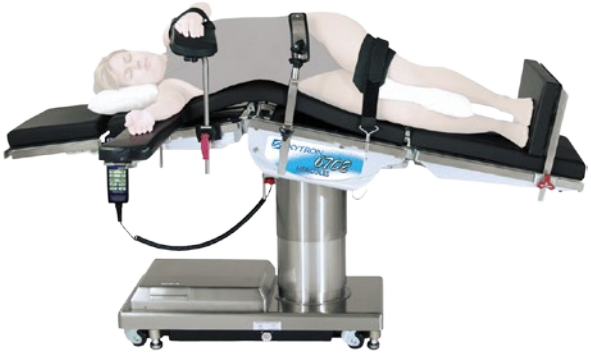

Nephrectomy

Accessories shown may not be available in all markets. Contact your SKYTRON Representative for details.

6702 General Purpose Patient Positioning Guidelines (Cont'd)

Neuro (Neck)

Neuro (Lumbar)

Shoulder Arthroscopy

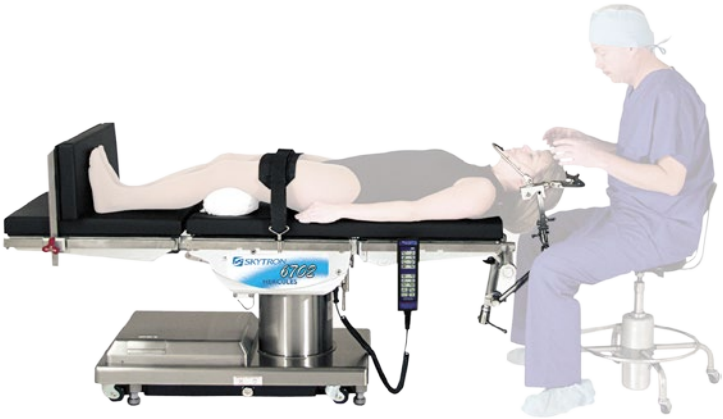

Neuro (Head)

Hip Revision

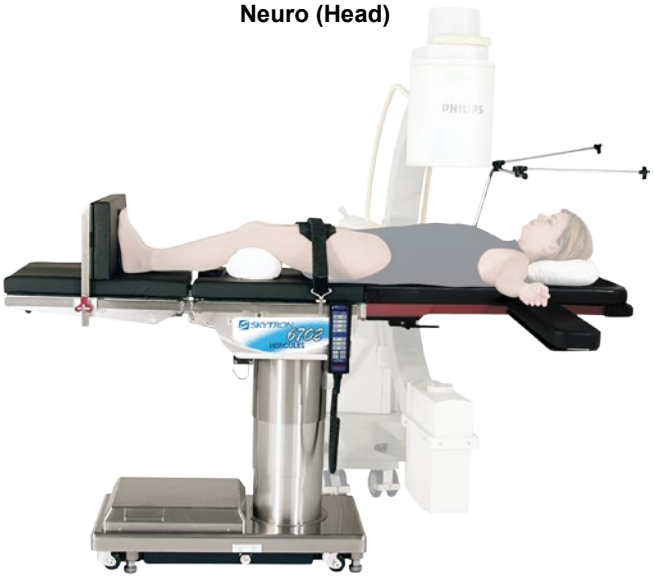

Cardiovascular

Accessories shown may not be available in all markets. Contact your SKYTRON Representative for details.

6702 Bariatric Recommended Patient Positioning Guidelines

Cysto/GYN

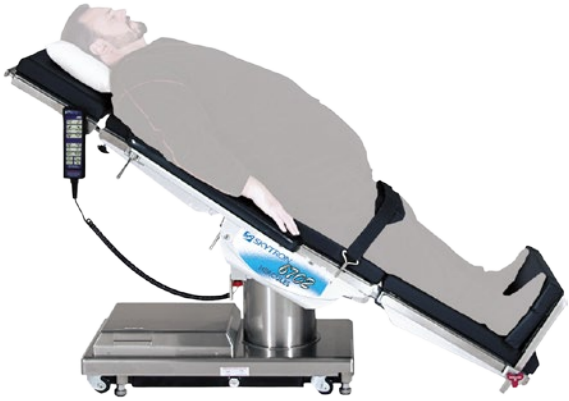

Gall Bladder

Abdominal

Accessories shown may not be available in all markets. Contact your SKYTRON Representative for details.

3-19. Positioning and Clearance

NORMAL TABLE TOP ORIENTATION

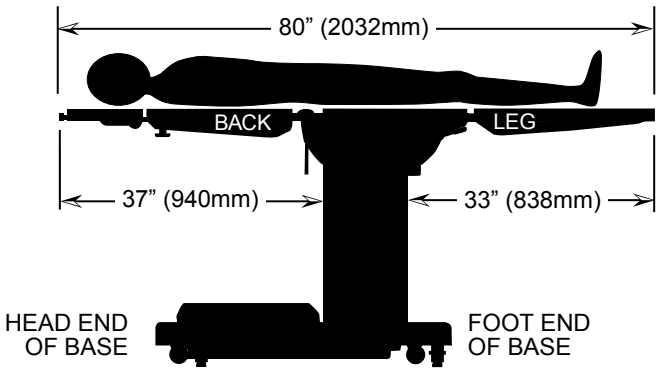

TOP ROTATION

IF POSITIONED WITHIN THE RED RANGE,
WEIGHT CAPACITY IS 1,200 LBS (540 KG) LIFT
AND 1,000 LBS (450 KG) ARTICULATION.

BRAKES MUST REMAIN LOCKED TO THE FLOOR

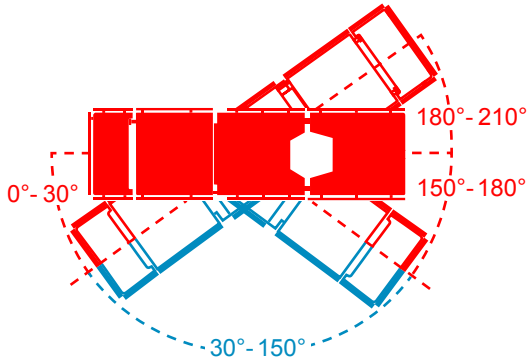

BRAKES MUST REMAIN LOCKED TO THE FLOOR

IF POSITIONED WITHIN THE BLUE RANGE, WEIGHT CAPACITY IS 1,200 LBS (540 KG).
BUT A HEAVY DUTY SUPPORT ROD ***MUST BE.USED*** ON THE BACK SECTION.
THE TABLE CANNOT BE ARTICULATED WHEN THE SUPPORT ROD IS USED.

TOP ROTATED 180°

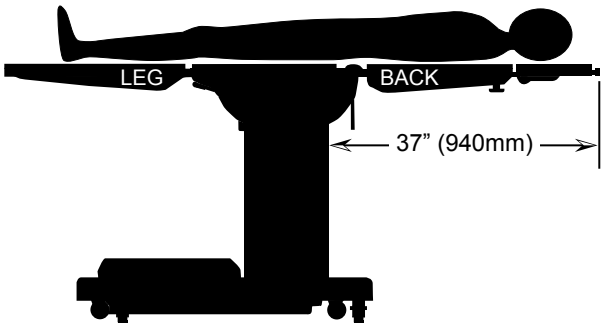

3-19. Positioning and Clearance (Cont'd)

PATIENT REVERSED HEAD SECTION
ATTACHED TO LEG SECTION

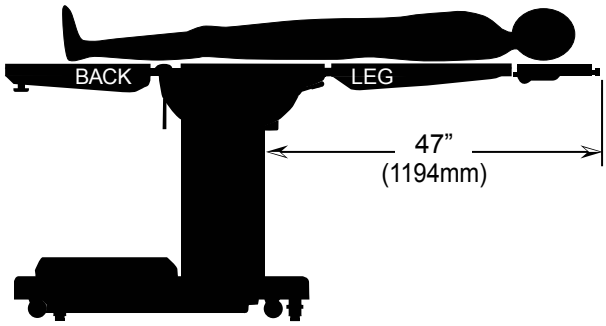

WEIGHT CAPACITY
500 LBS (227 KG).

USE AT 0° OR 180°
POSITIONS ONLY.

**BRAKES MUST
REMAIN LOCKED
TO THE FLOOR**

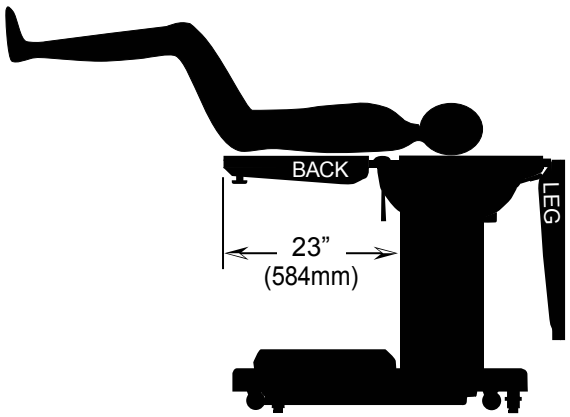

WEIGHT CAPACITY 1,000 LBS (450 KG)
WITH BACK OVER THE LONG PART
OF THE BASE.

ROTATED 180° MAXIMUM
WEIGHT CAPACITY IS 800 LBS (360 KG).

WARNING

**Consult with Skytron before reversing
a patient on the table.**

SECTION 4. MAINTENANCE

4-1. Cleaning and Disinfecting

WARNING

Personal injury to patient or staff may result from a lack of proper maintenance of this equipment.

CAUTION

Caution should be taken when cleaning the table to prevent excessive fluid entry into electrical connectors.

NOTICE

Always follow current AORN/EORNA Journal Guidelines to ensure proper cleaning and disinfection procedure.

Always follow product cleaning and disinfecting instructions and warnings provided by the cleaning product manufacturer.

a. Cleaning

The following procedure should be followed when cleaning the surgical table between cases or operations:

1. Place table top in the level position.

2. Ensure that all power is removed from the table. Take preventive measures to avoid spraying directly into connectors or electrical receptacles.

WARNING

Always follow OSHA/EASHW blood-borne pathogens standards for protective clothing, including gloves, masks, and eye protection when cleaning the surgical table.

3. Remove major contaminants from the table with disposable materials following appropriate biohazard waste disposal procedures.

4. Remove all table pads and place them on a flat surface for cleaning.

CAUTION

Thoroughly read and follow manufacturer's directions for all cleaning fluids. DO NOT use cleaners containing phenolics.

5. Use a ready-to-use detergent diluted as required by manufacturer. Ensure that the active ingredients of the product are compatible with the materials of the SKYTRON table.

6. Apply cleaning fluid liberally to top and sides of each pad and wipe with a clean lint-free cloth.

7. Using a clean, damp, lint-free cloth, wipe the pads to remove the cleaning fluid.

8. Using a clean, dry, lint-free cloth, wipe the pads to remove all moisture.

9. Repeat steps **6** through **8** to clean the bottom of each pad. Allow to dry.

CAUTION

When using spray cleaners, DO NOT spray fluids directly into electrical receptacles or components.

10. Repeat cleaning procedure for all table surfaces including the top, sides, elevation column, base, and all accessories.

CAUTION

Before replacing pads on the table, make sure the pads and all mating surfaces are completely dry. Moisture trapped between the pads and mating surfaces may cause distortion of table tops.

11. When the cleaning procedure is complete, replace all pads and accessories as applicable.

CAUTION

Avoid immersing the pendant control assembly in liquids.

12. Apply cleaning solution to the pendant control and cord.

13. Use a clean cloth dampened with water to remove cleaning solution.

14. Use another clean damp cloth to remove any remaining residue.

15. Install pendant control on side rail for storage when cleaning procedure is complete. Allow to dry.

16. Clean casters and floor lock brakes.

b. Disinfection

Use the following steps when disinfecting the surgical table:

CAUTION

The following antiseptic solutions are approved for use on the table:

- Sodium Hypochlorite 6% diluted to 0.1% (halogen containing compound)
- Hypo Alcohol (iodine color removing agent)
- Chlorhexidine (chlorhexidine gluconate 0.5%)
- Benzalkonium Chloride (invert soap 10%)
- Povidone Iodine
- Ethanol 80%
- Oxydol (hydrogen peroxide)
- Isopropyl Alcohol (IPA) 99.5%

1. Remove all table pads from the table.
2. Apply a proper quantity of disinfectant on clean and lint-free cloth, then wipe the top, sides, and bottom of the pads with the cloth.

NOTICE

Use enough disinfectant on the cloth to ensure it does not dry when wiping.

3. Disinfect the table top and the side rails using the same procedure.
4. Wipe all parts with dry, clean, and lint-free cloth within 15 minutes after disinfecting.

4-2. Routine Inspections

CAUTION

DO NOT use the table if any of the inspection points fail.

a. Performed Daily by Operator

The following inspections should be done before and after each use of the table:

1. Inspect all table pads for damage.
2. Inspect all table top sections for damage.
3. Inspect the table top assembly, all top sections, and the base for stability.
4. Inspect the power cord and plug for any signs of burns or damage.
5. Test the operation of the main power switch (POWER SWITCH).
6. Test all functions of the pendant control for proper table movement.
7. Inspect the table base surface and the floor for any signs of oil leaking.
8. Perform steps of cleaning procedure.
9. Recharge batteries / check battery charge.

b. Performed Weekly

1. Check each function for movement to ensure quiet and smooth operation.
2. Check safety interlock system function and audible alarms.
3. Check the overall condition of the pendant control.

c. Performed Monthly

1. Inspect casters and hydraulic floor lock assembly; clean as necessary.
2. Inspect the emergency back-up switches for operation.
3. Inspect the condition of the pendant control cord.
4. Inspect the condition of the table pad.

4-3. Preventive Maintenance

The following preventive maintenance checks and services are recommended to ensure the serviceability and proper operation of your SKYTRON surgical table. Maintenance must be performed by a SKYTRON authorized service representative using SKYTRON authorized replacement parts and service techniques.

During normal cleaning, a general visual examination should be made checking for leaks, loose bolts or parts, and cracked, chipped, or missing paint. Any necessary repairs should be made.

MALFUNCTION	POSSIBLE CAUSE	CORRECTIVE ACTION
Table will not turn on	Mains switch off	Turn on Mains switch.
	Defective pendant control	Replace pendant control.
No movement	Emergency stop switch activated, removing power to hydraulic system.	Turn the emergency stop switch to disengage it and restore power to the hydraulic system.
	Totally discharged batteries	Charge table batteries.
	Defective hydraulic pump	Contact SKYTRON Service.
	Defective control box	
	Defective hydraulic valve	
	Defective pendant control	
Table remains on battery mode when main power cord is connected	Incorrect Mains connection	Reconnect-connect Mains connection.
	Defective power cord	Replace power cord.
	Main breaker blown	Reset Mains circuit breaker.
	Main power is off	Turn Mains power switch on.
Power fails even though battery is charged	Batteries require replacement	Replace batteries.
The status of Battery Indicator is 2 Red	Fuse requires replacement	Contact SKYTRON Service.
Replacement of fuse must be performed by a certified SKYTRON technician.		

Annually or as required based on usage, the following checks and services should be performed:

a. Check all hydraulic fittings, mini-valves, and slave cylinders for proper operation and any signs of leaks.

b. Check the hydraulic speed controls and adjust as necessary.

c. Pressure check (with a gauge) the pressure relief valve.

d. Check all mechanical adjustments and adjust as necessary.

e. Check hydraulic fluid level.

f. Lubricate the slider assembly.

g. Check function of leg and back section release levers; lubricate as necessary.

h. Check the recharging of batteries:

- Whenever table is placed into use.
- Whenever the table is unused for an extended period of time.

i. Check table top level function.

j. Inspect emergency back-up controls.

4-4. Operator Troubleshooting

When troubleshooting a table malfunction, first determine the following: Does the problem affect all control functions?

k. Does the problem affect only one control function?

l. If the problem affects one control function is it in both directions?

m. Is the problem intermittent?

n. Is the problem no movement of a table surface or does the table surface lose position?

4-5. Maintenance Checks & Services

Refer to Replacement Parts section (Section 5) for component locations.

CAUTION

Always inspect product prior to use to ensure safe and correct operation. Any product deemed to be malfunctioning should be removed from service immediately and labeled inoperable.

Refer all service to a SKYTRON authorized service representative.

a. Head Section

1. Ensure both head section locking knobs are installed, they have full range of motion, and their threads are not stripped (Figure 4-1).

Figure 4-1. Head Section

2. Ensure the acorn nuts on head section release bar are tightly secured.

3. Ensure the head section release bar plunger properly engages the head section trunnion gears.

4. Ensure all side rail fasteners are installed and secured tightly.

5. Ensure the head section extension shafts are not deformed and provide smooth full range of movement.

6. Place a small amount of white lithium grease on the head section release bar plunger and the head section trunnion gears.

7. Ensure the head section is level (parallel to the floor) and even with the back section. If it is not, notify a certified SKYTRON technician.

b. Top Section Components

1. Ensure the leg and back section release levers lock and release properly (Figure 4-2).

Figure 4-2. Leg & Back Release Levers

2. Ensure the leg and back section pins are not distorted and the leg and back section slides smoothly on the pins.

3. Apply a thin coat of white lithium grease to the pins.

4. Lower the leg section 90° to ensure that the leg section release levers gravity stops prevent disengagement.

5. Ensure the side rail gravity stops are installed and move freely.

6. Ensure that all warning and caution labels are present and readable.

7. Ensure the table top sections are not cracked or warped. Replace as needed.

8. Ensure heads of the screws that secure the table top sections do not have sharp burrs.

9. Place an X-ray top into the table top sections to ensure that it has a snug fit.

10. Ensure the leg section does not "search", continuous alternating raising and lowering, when returning the leg section to level. This micro-switch adjustment, if needed, can only be performed by a SKYTRON authorized service representative.

11. Ensure table top rotation locking handle is present and secures the table top from excessive movement when tightened (Figure 4-3).

Figure 4.3. Top Rotation Locking Handle

12. Inspect for hydraulic oil leaks.

13. Apply a thin coat of white lithium grease to the kidney bridge extension shafts.

14. Ensure the support bushings rotate when the back section is raised.

c. Base Components

1. Ensure the power cord is not frayed, pinched, or otherwise damaged (Figure 4-4).

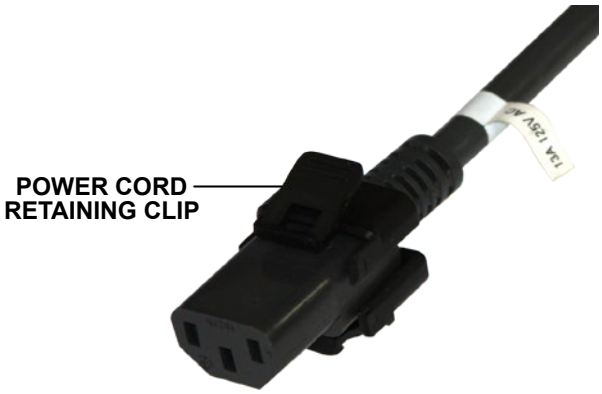

Figure 4-4. Power Cord

2. Ensure the power cord retaining clip is present and locks the power cord to the table POWER CORD receptacle.

3. Observe that the power indicator LEDs and battery indicator LEDs are functioning.

4. Ensure the ground equalization terminal post is installed and is securely attached.

5. Observe that the pendant control cover is not torn or has sections missing. Replace as needed.

6. Ensure the pendant control cord is not frayed, pinched, or otherwise damaged.

7. Test each pendant control articulation button for full range of travel.

8. After the AC power and battery are turned OFF, briefly toggle each emergency back up switch to ensure operation.

9. Test the pendant control's BRAKE UNLOCK button and TABLE UP (lock) button functions.

10. Open the EMERGENCY BRAKE RELEASE valve to ensure proper operation.

11. Inspect for hydraulic oil on the base, under the access cover, and on all four (4) brakes.

12. Ensure the shroud assemblies are not damaged and slide smoothly.

13. Ensure all screws are installed and secured tightly.

14. Ensure all four (4) casters rotate 360° on both axis. Ensure there are no flat spots on the casters.

15. Ensure there are four (4) brake pads and the pads are not chipped or otherwise damaged.

d. Hydraulic Oil Level Check

NOTICE

The elevation cylinder should be completely down, the brakes released, and all the other control functions in their level position before checking hydraulic oil level.

1. Remove four (4) screws that secure the service access cover to the base.

2. Carefully remove the service access cover without disconnecting the cord attached to the cover.

3. Remove the oil filler cap from the oil reservoir (Figure 4-5).

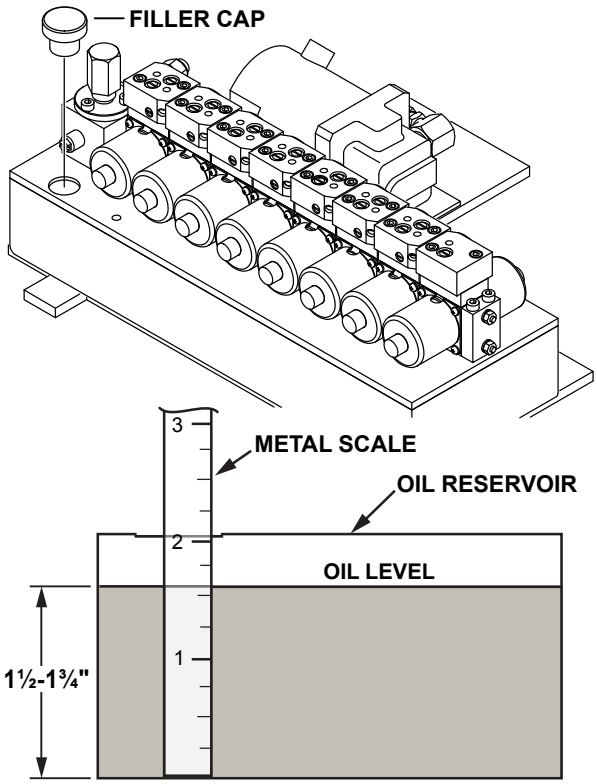

Figure 4-5. Oil Level Check

4. Use a metal scale to check the hydraulic oil level in the oil reservoir. The hydraulic oil level should be 1½ to 1¾ inch (40 to 45mm) from the bottom of the tank.

5. If necessary, add hydraulic oil to the oil reservoir until the oil level is 1½ to 1¾ inch (40 to 45mm) from the bottom of the tank.

6. Clean up any oil spillage, if necessary.

7. Replace the oil filler cap.

8. Replace the service access cover and secure using four (4) screws.

e. Battery Replacement

NOTICE

Batteries must always be replaced in pairs.

1. Remove four (4) screws that secure the service access cover to the base.

2. Carefully remove the service access cover without disconnecting the cord attached to the cover.

3. Loosen and remove the nuts and washers that secure the battery hold down bar in place over the batteries (Figure 4-6). Remove the battery hold down bar.

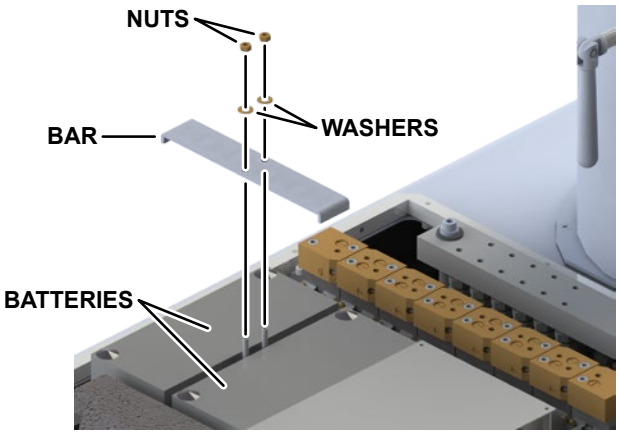

Figure 4-6. Battery Hold Down Bar

4. Remove the wire terminal connections to both batteries (Figure 4-7).

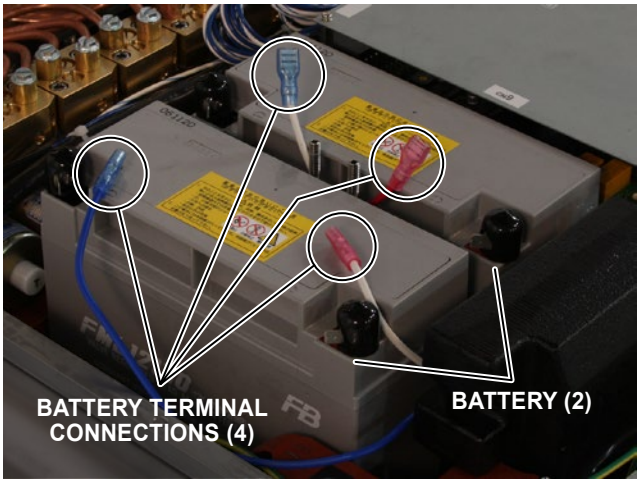

Figure 4-7. Battery Terminal Disconnect

5. While making sure the battery terminal wires are clear, carefully remove the batteries by lifting each straight up and out.

6. While making sure battery terminal wires are clear, carefully install the new batteries (Skytron PN E0002293).

7. Connect the correct wires to the battery terminals as shown in Figure 4-8.

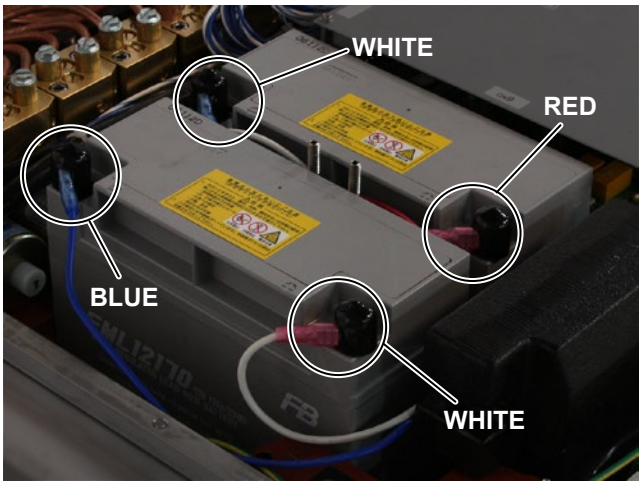

Figure 4-8. Battery Terminal Connect

8. Install battery hold down bar over batteries and secure using washers and nuts (Figure 4-6).

9. Replace the service cover and secure using four (4) screws.

4-6. Service

WARNING

DO NOT disassemble or modify the table. Unauthorized disassembly may cause electric shock or malfunction.

SKYTRON maintenance manuals are available upon request; however, non-authorized service personnel are required to complete applicable service training.

For a syllabus, schedule, availability, cost and overview; logon www.skytron.us and click on TRAINING. If interested in attending a training session, contact your SKYTRON representative for sponsorship.

To obtain SKYTRON authorized service or preventive maintenance contracts, contact your nearest SKYTRON representative.

4-7. Disposal Instructions

The end of the useful life for the SKYTRON surgical table is 10 years under normal operating conditions. Service parts are available for this period.

Contact your SKYTRON authorized representative for disposal instructions regarding the SKYTRON surgical table or parts in accordance with current environmental regulations for medical products.

a. Environmental Protection

Use proper disposal methods whenever disposing of old or damaged table parts. Always follow compliance to regulatory standards pertaining to Federal, State, and Local regulations.

b. Hydraulic Fluid

Drain waste hydraulic fluid prior to disposal of the surgical table. Dispose of fluid properly.

c. Lead Acid Batteries

Avoid disposal of old or damaged batteries with conventional waste. Lead acid batteries are classified as toxic waste.

4-8. Storage

After a long period of storage, the following items should be inspected before placing the unit into use:

- Mains power function – ON/OFF operation and LED battery function
- Battery power function / mode
- Pendant control operation & back light
- Table caster movement and condition
- Operational movement of each function with load to full stroke
- Condition of hydraulic floor lock brake cylinders & pads
- Stability of table top
- Stability while table floor lock brakes are activated
- No hydraulic oil leaks
- Hydraulic fluid level
- Table top is horizontal and level when using level function
- Operating of locking levers & locking knobs on back, leg, & head sections
- Overall appearance and cleanliness

CAUTION

If the table is stored for a period greater than 6 months, the batteries should be removed and stored in a dry, clean condition at a storage temperature of 68°F (20°C). Batteries should be re-charged every 6 months of product storage.

4-9. Maintenance Matrix

The specific items listed in the MAINTENANCE MATRIX should be inspected and repaired or replaced as necessary. The suggested time intervals are intended as a guideline only and actual maintenance will vary by use and conditions. For optimal usage, safety and longevity of the product, have it serviced only by a SKYTRON authorized service representative using SKYTRON authorized replacement parts and service techniques.

SURGICAL TABLE MAINTENANCE MATRIX				
Component	**1 Year**	**2 Years**	**5 Years**	**7 Years**
Lateral Tilt Housing Bolts	X			
Side Rails & Gravity Stops	X			
Velcro	X			
Hydraulic Oil Level	X			
A.C. Power Cord	X			
Self-Leveling Brake Pads	X			
Casters	X			
Lubricate Elevation Column	X			
Lubricate & Inspect Hoses	X			
Tighten X-Ray Top Standoffs & Apply Blue Loctite®	X			
Back Section Cylinder	X			
Trendelenburg Cylinder	X			
Lateral Tilt Cylinder	X			
Elevation Cylinder	X			
Kidney Lift Cylinder	X			
Foot-Leg Section Cylinder	X			
Plumbing & Terminal Block Assembly	X			
Emergency Stop Switch	X			
Batteries, 12 Volt		X		
Brake Pads			X	
Pendant Control Assembly			X	
Main ON/OFF Switch (POWER SWITCH)				X
Power Cord Assembly				X
Power Cord Receptacle (POWER CORD)				X
Pendant Control Connectors				X
Grounding Lead				X
Back Section Micro-Switches				X
Trendelenburg Micro-Switches				X
Leg Section Micro-Switches				X
Lateral Tilt Micro-Switches				X
Brake Cylinders	X			
EMERGENCY BRAKE RELEASE Valve	X			
Pump/Motor Assembly				X
Pressure Relief Valve Assembly	X			
Hydraulic Oil System Flush				X
Mini-Valves				X
Riser Cord Assembly				X
Slider Column	X			
Elevation Shroud Gasket				X
Access Cover Gasket				X
Labels & Operation Decals	X			

SECTION 5. REPLACEMENT PARTS

Replacement parts listed in this section have been identified by SKYTRON as servicable by facility personnel and are available for purchase. To obtain SKYTRON certified parts and authorized service, contact your SKYTRON representative.

CAUTION

Any parts or assemblies not listed in this section must be serviced or replaced by SKYTRON authorized service personnel only. This is necessary to avoid the possibility of damage to the equipment.

NOTICE

The following abbreviations are used in this section:

- AR = As Required
- NS = Not Shown
- NAS = Not Available Separately

5-1. Head Section Components

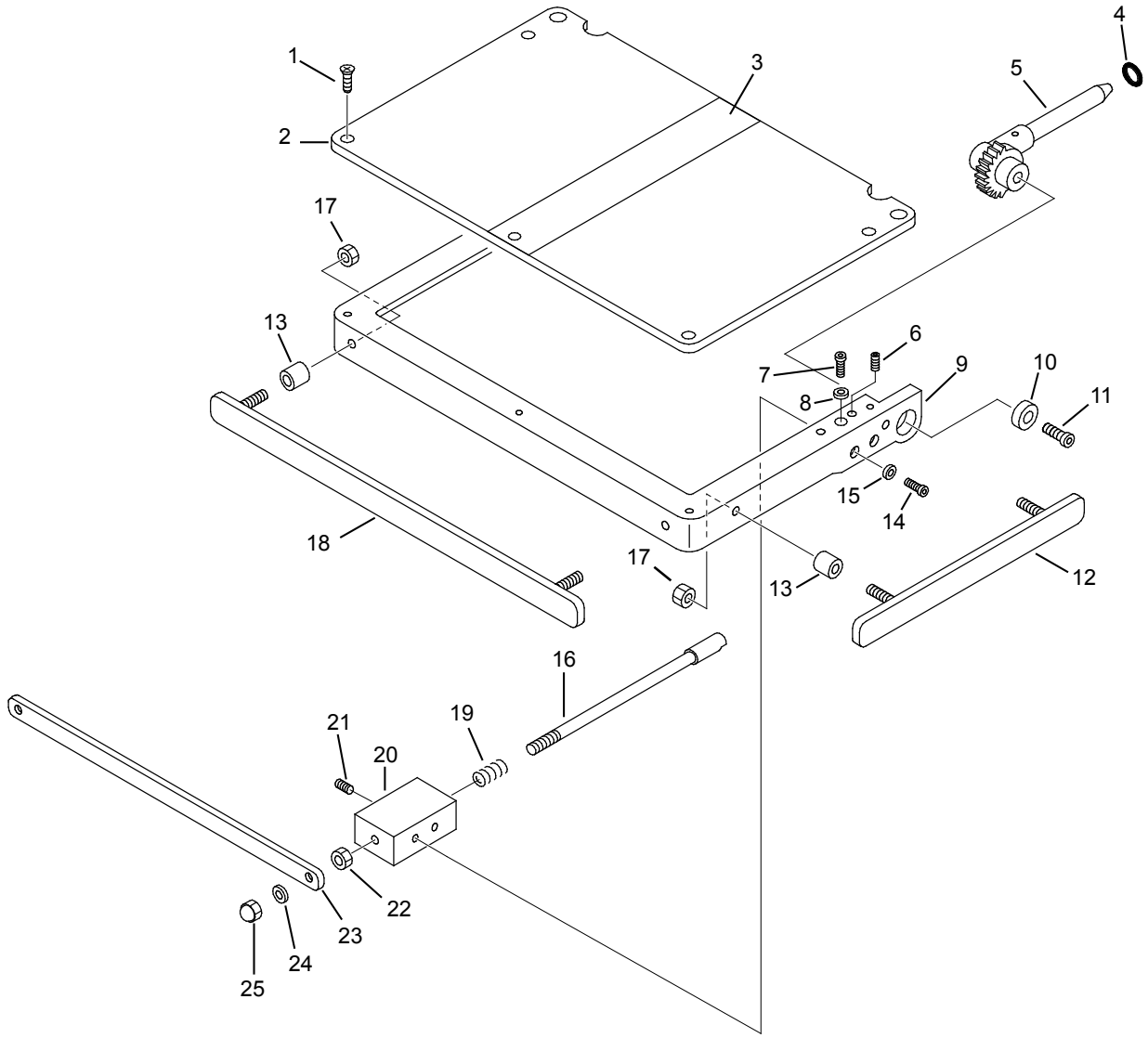

5-1. Head Section Components (Cont'd)

Item	Part No.	Description	Qty.
1	A0240515	SCREW, phillips, countersunk, M5 x 15 (plated)	4
2	360A038	TOP, head section	1
3	D010001A	VELCRO, hook	AR
4	C40120B1	O-RING, P-12	2
5	560CC06	SHAFT AND GEAR ASSEMBLY, extension, head section, right	1
NS	560CC07	SHAFT AND GEAR ASSEMBLY, extension, head section, left	1
6	A0310815	SCREW, set, M8 x 15 (plated)	2
7	A0010615	BOLT, allen, M6 x 15 (plated)	2
8	A5110609	WASHER, lock, M6 (plated)	2
9	360A042	FRAME, head section	1
10	650A235	BUSHING, head section	2
11	A0010820	BOLT, allen, M8 x 20 (plated)	2
12	362DU01	RAIL, side, head section, US	2
13	5000513	COLLAR, side rail	AR
14	A0010615	BOLT, allen, M6 x 15 (plated)	4
15	A5110609	WASHER, lock, M6 (plated)	4
16	360AU01	PLUNGER, release,	2
17	A3410801	NUT, hex, w/ lockwasher, M8 (plated),	AR
18	362DU02	RAIL, accessory, US	1
19	C810007	SPRING, release	2
20	5000563	BLOCK, bearing, right	1
NS	5000562	BLOCK, bearing, left	1
21	A0310508	SCREW, set, M5 x 8 (plated)	2
22	A3010803	NUT, hex, M8 (plated)	2
23	5000014	RELEASE BAR, head section	1
24	A5110800	WASHER, lock, M8 (plated)	2
25	A3210801	NUT, acorn, M8 (plated)	2

5-2. Top Section Components

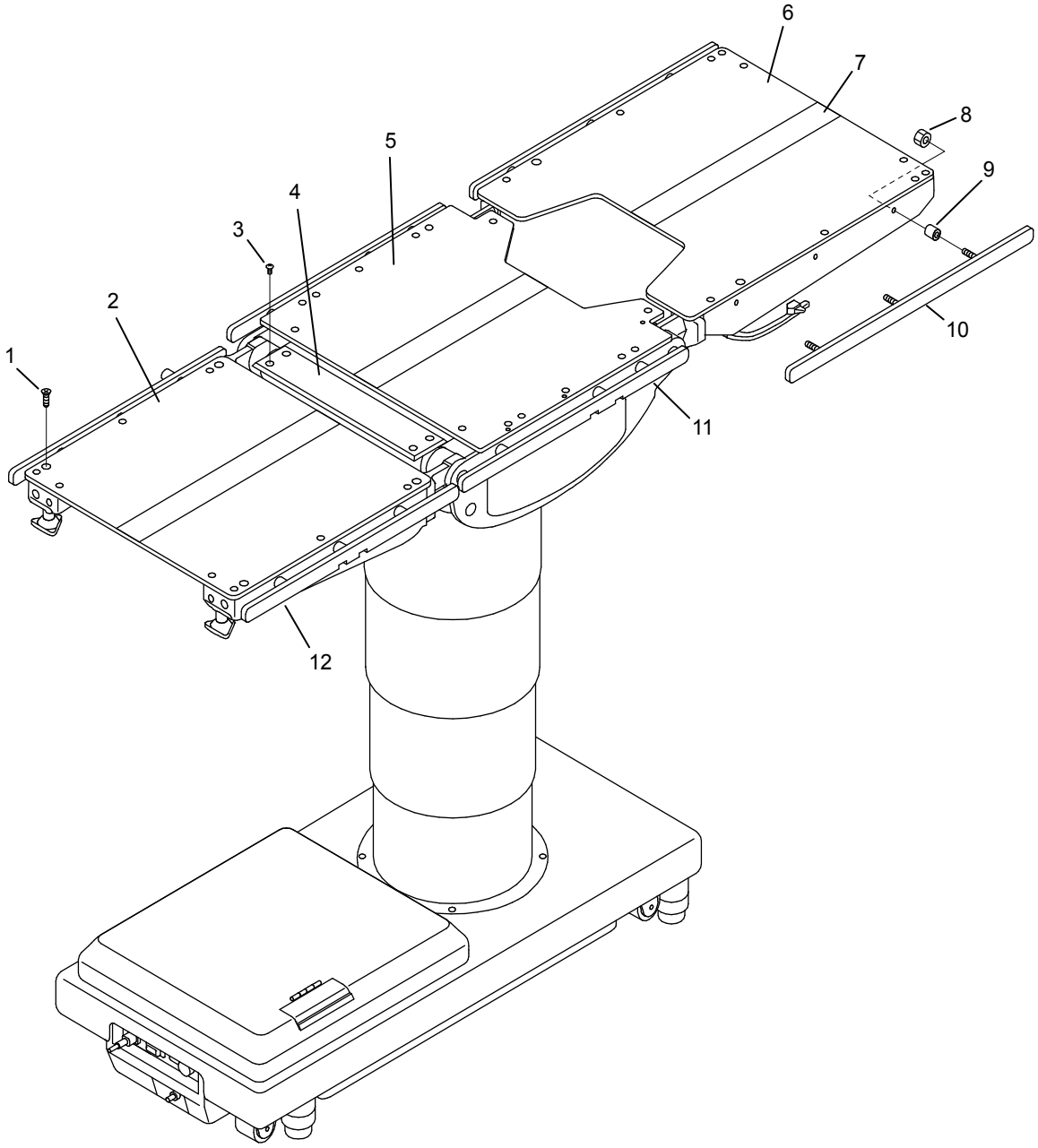

5-2. Top Section Components (Cont'd)

Item	Part No.	Description	Qty.
1	A0240515	SCREW, phillips head, M5 x 15 (plated)	18
2	660A021	TOP, back section	1
NS	C700259	Gasket A, back section	1
NS	C700260	Gasket B, back section	1
3	A0440510	SCREW, round head, M5 x 10 (plated)	4
4	670A245	TOP, kidney bridge	1
5	670A043	TOP, seat section	1
6	660A022	TOP, foot / leg section	1
NS	C700261	Gasket A, foot section	1
NS	C700262	Gasket B, foot section	1
7	D010001A	VELCRO, hook	AR
8	A3410801	NUT, hex, M8 (plated)	AR
9	5000513	COLLAR, side rail	AR
10	671HU14	RAIL, side, foot / leg section, right, US	1
NS	671HU13	RAIL, side, foot / leg section, left, US	1
11	671HU12	RAIL, side, seat section, right, US	1
NS	671HU11	RAIL, side, seat section, left, US	1
12	671HU16	SIDE RAIL, back section, right, US	1
NS	671HU15	SIDE RAIL, back section, left, US	1

5-3. Base Components

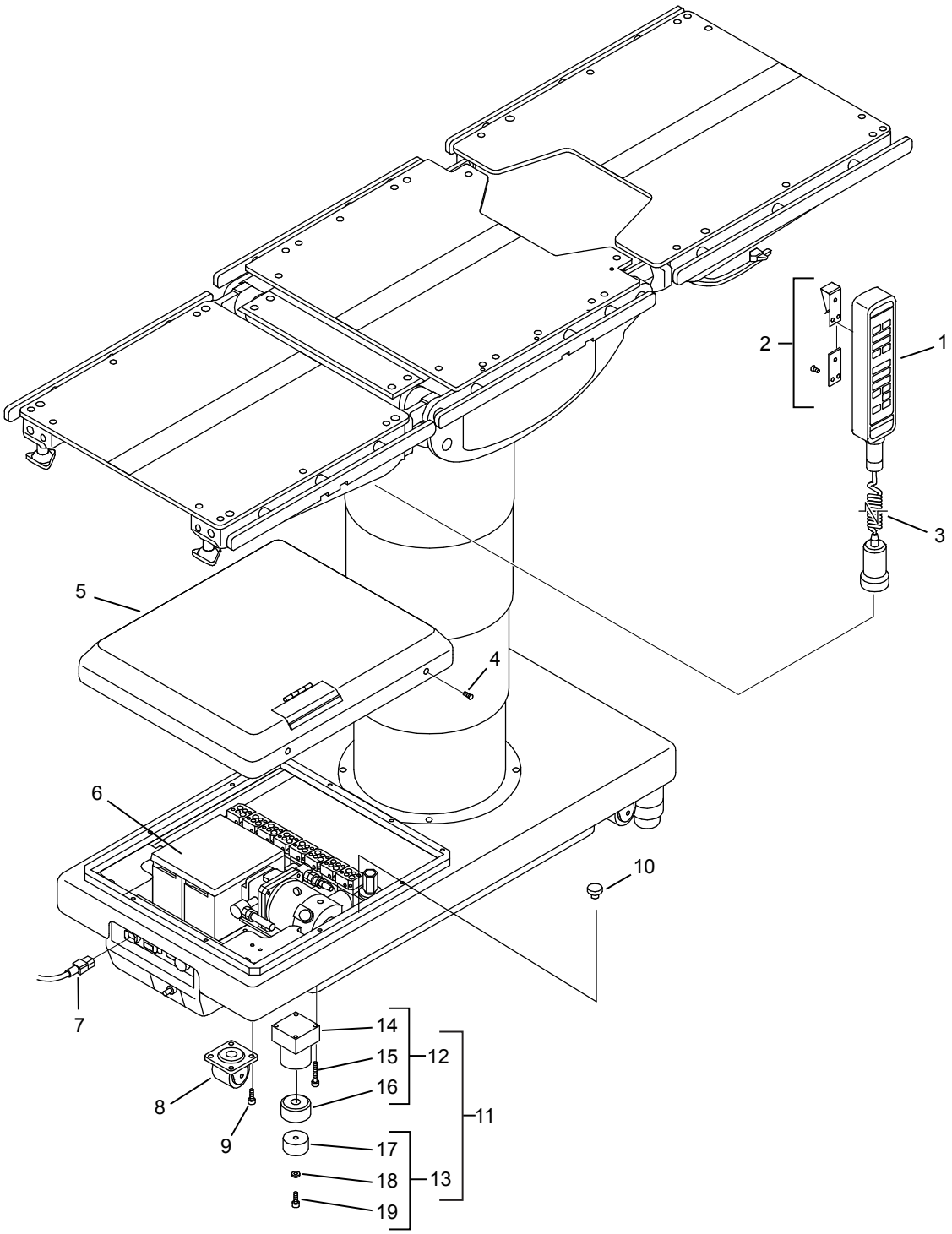

5-3. Base Components (Cont'd)

Item	Part No.	Description	Qty.
1	SWB0275	PENDANT CONTROL ASSEMBLY	1
2	D5-031-14	HOOK, pendant (w/ screw and insert)	1
3	D5-034-18-1	CORD, pendant control	1
4	A0220408	SCREW, phillips, M4 x 8	4
5	650BC59	COVER, service access	1
6	E0002293	BATTERY, 12V (replace as pair)	2
7	E0001194	POWER CORD ASSEMBLY, US	1
8	C0006502	CASTER, 105HBP	4
9	A0021020	BOLT, allen, M10 x 20	16
10	001J026	CAP, oil filler	1
NS	001J012	Fitting, oil filler	
11	J090B15	KIT, brake cylinder assy (includes 4 complete cylinders)	1
12	J090D04	CYLINDER ASSY, brake (includes Items 14 through 16)	4
13	D4-031-100	KIT, replacement, brake pad (includes 2 soft pads, 2 hard pads, 4 washers, 4 bolts)	1
14	NAS	CYLINDER ASSEMBLY, brake (included in J090D04)	1
15	A0020650	BOLT, allen, M6 x 50 (included in J090D04)	4
16	NAS	SEAT, brake rubber (included in J090D04)	1
17	NAS	PAD, brake, self-leveling, hard (included in D4-031-100)	2
	NAS	PAD, brake, self-leveling, soft (included in D4-031-100)	2
18	5000505	WASHER (included in D4-031-100)	4
19	A0020620	BOLT, allen, M6 x 20 (included in D4-031-100)	4
NS	D6-010-90	OIL, hydraulic (quart)	AR

SECTION 6. ELECTROMAGNETIC EMISSIONS

Medical Electrical Equipment needs special precautions regarding EMC and needs to be installed and put into service according to the EMC information provided in this manual.

Portable and mobile RF communications equipment can affect Medical Electrical Equipment.

The use of Accessories, transducers, and cables other than those specified, with the exception of transducers and cables sold by the Manufacturer of this device as replacement parts for internal components, may result in increased Emissions or decreased Immunity of the 6702 Surgical Table.

The 6702 Surgical Table should not be used adjacent to or stacked with other equipment and that if adjacent or stacked use is necessary, the 6702 Surgical Table should be observed to verify normal operation in the configuration in which it will be used.

GUIDANCE AND MANUFACTURER'S DECLARATION – ELECTROMAGNETIC EMISSIONS		
The 6702 Surgical Table is intended for use in the electromagnetic environment specified below. The customer or the user of the 6702 Surgical Table should assure that it is used in such an environment.		
Emissions Test	**Compliance**	**Electromagnetic Environment – Guidance**
RF emissions CISPR 11	Group 1	The 6702 Surgical Table uses RF energy only for its internal function. Therefore, its RF emissions are very low and are not likely to cause any interference in nearby electronic equipment.
RF emissions CISPR 11	Class A	The 6702 Surgical Table is suitable for use in all establishments, other than domestic establishments and those directly connected to the public low-voltage power supply network that supplies buildings used for domestic purposes.
Harmonic emissions IEC 61000-3-2	Class A	
Voltage fluctuations / flicker emissions IEC 61000-3-3	Complies	

RECOMMENDED SEPARATION DISTANCES BETWEEN PORTABLE AND MOBILE RF COMMUNICATIONS EQUIPMENT AND THE 6702 SURGICAL TABLE

The 6702 Surgical Table is intended for use in an electromagnetic environment in which radiated RF disturbances are controlled. The customer or the user of the 6702 Surgical Table can help prevent electromagnetic interference by maintaining a minimum distance between portable and mobile RF communications equipment (transmitters) and the 6702 Surgical Table as recommended below, according to the maximum output power of the communications equipment.

Rated Maximum Output Power of Transmitter	Separation Distance According to Frequency of Transmitter m		
	150 kHz to 80 MHz	**80 MHz to 800 MHz**	**800 MHz to 2,5 GHz**
W	$d = 1.2\sqrt{P}$	$d = 1.2\sqrt{P}$	$d = 2.3\sqrt{P}$
0,01	0.12	0.12	0.23
0,1	0.38	0.38	0.73
1	1.2	1.2	2.3
10	3.8	3.8	7.3
100	12	12	23

For transmitters rated at a maximum output power not listed above, the recommended separation distance d in metres (m) can be estimated using the equation applicable to the frequency of the transmitter, where *P* is the maximum output power rating of the transmitter in watts (W) according to the transmitter manufacturer.

NOTE 1: At 80 MHz and 800 MHz, the separation distance for the higher frequency range applies.

NOTE 2: These guidelines may not apply in all situations. Electromagnetic propagation is affected by absorption and reflection from structures, objects and people.

GUIDANCE AND MANUFACTURER'S DECLARATION – ELECTROMAGNETIC IMMUNITY			
The 6702 Surgical Table is intended for use in the electromagnetic environment specified below. The customer or the user of the 6702 Surgical Table should assure that it is used in such an environment.			
Immunity Test	**IEC 60601 Test Level**	**Compliance Level**	**Electromagnetic Environment – Guidance**
Electrostatic discharge (ESD) IEC 61000-4-2	±6 kV contact ±8 kV air	±6 kV contact ±8 kV air	Floors should be wood, concrete or ceramic tile. If floors are covered with synthetic material, the relative humidity should be at least 30%
Electrical fast transient/burst IEC 61000-4-4	±2 kV for power supply lines ±1 kV for input/output lines	±2 kV for power supply lines ±1 kV for input/output lines	Mains power quality should be that of a typical commercial or hospital environment.
Surge IEC 61000-4-5	±1 kV line(s) to line(s) ±2 kV line(s) to earth	±1 kV line(s) to line(s) ±2 kV line(s) to earth	Mains power quality should be that of a typical commercial or hospital environment.
Voltage dips, short interruptions and voltage variations on power supply input lines IEC 61000-4-11	<5 % U_T (>95 % dip in U_T) for 0.5 cycle 40 % U_T (60 % dip in U_T) for 5 cycles 70 % U_T (30 % dip in U_T) for 25 cycles <5 % U_T (>95 % dip in U_T) for 5 sec	<5 % U_T (>95 % dip in U_T) for 0.5 cycle 40 % U_T (60 % dip in U_T) for 5 cycles 70 % U_T (30 % dip in U_T) for 25 cycles <5 % U_T (>95 % dip in U_T) for 5 sec	Mains power quality should be that of a typical commercial or hospital environment. If the user of the 6702 Surgical Table requires continued operation during power mains interruptions, it is recommended that the 6702 Surgical Table be powered from an uninterruptible power supply or a battery.
Power frequency (50/60 Hz) magnetic field IEC 61000-4-8	3 A / m	3 A / m	Power frequency magnetic fields should be at levels characteristic of a typical location in a typical commercial or hospital environment
NOTE: U_T is the a.c. mains voltage prior to application of the test level.			

GUIDANCE AND MANUFACTURER'S DECLARATION – ELECTROMAGNETIC IMMUNITY			
The 6702 Surgical Table is intended for use in the electromagnetic environment specified below. The customer or the user of the 6702 Surgical Table should assure that it is used in such an environment.			
Immunity Test	**IEC 60601 Test Level**	**Compliance Level**	**Electromagnetic Environment – Guidance**
Conducted RF IEC 61000-4-6 Radiated RF IEC 61000-4-3	3 Vrms 150 kHz to 80 MHz 3 V/m 80 MHz to 2.5 GHz	3 Vrms 150 kHz to 80 MHz 3 V/m 80 MHz to 2.5 GHz	Portable and mobile RF communications equipment should be used no closer to any part of the 6702 Surgical Table, including cables, than the recommended separation distance calculated from the equation applicable to the frequency of the transmitter. **Recommended separation distance** $d = 1.2\sqrt{P}$ $d = 1.2\sqrt{P}$ 80 MHz to 800 MHz $d = 2.3\sqrt{P}$ 800 MHz to 2.5 GHz where ***P*** is the maximum output power rating of the transmitter in watts (W) according to the transmitter manufacturer and ***d*** is the recommended separation distance in metres (m). Field strengths from fixed RF transmitters, as determined by an electromagnetic site survey, [a] should be less than the compliance level in each frequency range. [b] Interference may occur in the vicinity of equipment marked with the following symbol:

NOTE 1: At 80 MHz and 800 MHz, the higher frequency range applies.

NOTE 2: These guidelines may not apply in all situations. Electromagnetic propagation is affected by absorption and reflection from structures, objects and people.

[a] Field strengths from fixed transmitters, such as base stations for radio (cellular/cordless) telephones and land mobile radios, amateur radio, AM and FM radio broadcast and TV broadcast cannot be predicted theoretically with accuracy. To assess the electromagnetic environment due to fixed RF transmitters, an electromagnetic site survey should be considered. If the measured field strength in the location in which the 6702 Surgical Table is used exceeds the applicable RF compliance level above, the 6702 Surgical Table should be observed to verify normal operation. If abnormal performance is observed, additional measures may be necessary, such as re-orienting or relocating the 6702 Surgical Table.

[b] Over the frequency range 150 kHz to 80 MHz, field strengths should be less than 3 V/m.

SECTION 7. REVISION HISTORY

Date	Revision	Revision History
04/01/2013	0	Initial release.
04/30/2013	1	Updated 5-1, 5-2, and 5-3 parts list tables to match released 6702 Parts Catalog.
06/26/2013	2	Updated inside cover. Updated ETL listing information on page 8. Correction to Figure 3-4, 3-9, and 3-11. Corrected Error Mode table on page 17. Corrected illustrations on page 31 and 32. Revised hydraulic oil check procedure on page 38. Corrected dimensional information on Figure 2-1 (page 9), Figure 3-15 (page 20), and Figure 3-18 (page 21) and associated text. Corrected PL information on pages 45 and 49.
09/23/2014	3	Cover & footer new Skytron logo. Inside cover Mizuho corporation name, address. Page 1 table of contents updated. Page 10 new Mizuho equipment label. Page 11 consolidated symbol table. Page 12-30 reformatted to eliminate page to align parts pages. Page 16 Battery indicator LED correction. Page 37 added access to step 9 service access cover.
05/15/2015	4	Added warning "Consult with Skytron before reversing a patient on the table"
09/05/17	5	Inside cover and Pg 10: Updated Emergo Europe address
09/27/2017	6	Updated the Emergo Europe address.

SKYTRON®
5085 Corporate Exchange Blvd. S.E.
Grand Rapids, MI 49512 • 616.656.2900